GX-AE SERIES
GX-A SERIES
GF-A SERIES

Multi-Function Balance

INSTRUCTION MANUAL

ＧＸ－ＡＥ series

GX-124AE/GX-224AE/GX-324AE

ＧＸ－Ａ series

GX-124A/GX-224A/GX-324A
GX-203A/GX-303A/GX-403A/GX-603A/GX-1003A/GX-1603A
GX-2002A/GX-3002A/GX-4002A/GX-6002A/GX-10002A
GX-6001A/GX-10001A

ＧＦ－Ａ series

GF-124A/GF-224A/GF-324A
GF-123A/GF-203A/GF-303A/GF-403A/GF-603A/GF-1003A/GF-1603A
GF-1202A/GF-2002A/GF-3002A/GF-4002A
GF-6002A/GF-10002A/GF-6001A/GF-10001A

A&D Company, Ltd.

1WMPD4003475B

© 2019 A&D Company Ltd. All rights reserved.
No part of this publication may be reproduced, transmitted, transcribed, or translated into any language in any form by any means without the written permission of A&D Company Ltd.

The contents of this manual and the specifications of the instrument covered by this manual are subject to change for improvement without notice.

Windows, Word and Excel are registered trademarks of the Microsoft Corporation.

Contents

1. Introduction 5

1-1 Features 5

1-2 About The Models 6

1-3 About The GX-AE Series 6

1-4 Compliance 7

1-5 About Communication Manual 7

2. Part Names, Installation And Precautions 9

2-1 Installing The Balance 13

2-2 Precautions 13

2-3 During Use 14

2-4 After Use 15

2-5 Power Supply 15

3. Display Symbols And Key Operation 16

4. Weighing 18

4-1 Units 18

4-2 Basic Operation 23

4-3 Counting Mode（PCS） 25

4-4 Percent Mode (%) 27

4-5 Animal Weighing Mode（Hold Function） 28

5. Impact Detection Function 28

5-1 Recording Impact History 29

5-2 Output Impact History 29

6. Response Adjustment / Self Check Function 30

6-1 Response Adjustment 31

6-2 Self Check Function / Automatic Setting Of Minimum Weighing Value By ECL 31

6-2-1 For Balance Software Version 1.200 To 1.220 32

6-2-2 For Balance Software Version 1.300 Or Later 33

7. Calibration 35

7-1 Automatic Calibration (GX-AE/GX-A Series Only) 36

7-2 One-Touch Calibration (GX-AE/GX-A Series Only) 37

7-3 Calibration Test Using An Internal Mass (GX-AE/GX-A Series 0.0001g Models Only) 38

7-4 Calibration Using An External Weight 39

7-5 Calibration Test Using An External Weight 40

7-6 How To Set The External Weight Value 41

7-7 Correcting The Internal Mass Value Of The GX-AE/GX-A Series 42
7-7-1 Correcting The Internal Mass Value Of The GX-AE/GX-A Series (Auto) 43
7-7-2 Correcting The Internal Mass Value Of The GX-AE/GX-A Series (Manual) 44
8. Function Switch And Initialization 46
8-1 Permit Or Inhibit 46
8-2 Initializing The Balance 49
9. Function Table 50
9-1 Setting The Function Table 50
9-2 Details Of The Function Table 52
9-3 Description Of The Class Environment Display 59
9-4 Description Of The Data Output 60
9-5 Description Of The Data Format 60
9-6 Output Example Of The Data Format 60
9-7 Clock And Calendar Function 61
9-8 Comparator Function 63
9-9 Description Of Application 70
9-10 Output The Function Settings 71
10. ID Number And GLP Report 73
10-1 Main Objective 73
10-2 Setting The ID Number 73
10-3 GLP Report 74
11. Data Memory 79
11-1 Data Memory For Weighing Data 79
11-2 Data Memory For Calibration And Calibration Test 83
12. Statistical Calculation Mode 86
12-1 How To Use The Statistical Calculation 86
12-2 Statistical Calculation Mode (Example Of Use) 91
13. Flow Measurement 93
13-1 How To Use Flow Measurement 93
14. Gross Net Tare Function 97
14-1 Preparation Of Gross Net Tare Function 97
14-2 Example Of Using The Gross Net Tare Function 99
15. Minimum Weighing Warning Function 100
15-1 Minimum Weighing Comparison 101

15-2 Input And Output Of The Minimum Weighing Value 101
15-2-1 Setting From The Function Setting (The Balance Software Version 1.200 To 1.220) 101
15-2-2 Setting From The Weighing Display (Balance Software Version 1.200 To 1.220) 102
15-2-3 Setting From The Function Setting (Balance Software Version 1.300 Or Later) 102
15-2-4 Setting From The Weighing Mode (Balance Software Version 1.300 Or Later) 105
15-2-5 Batch Output The Minimum Weighing Value (Balance Software Version 1.300 Or Later) 105
15-3 Setting Measurement Tolerance Of Minimum Weighing Value 107
15-4 Data Output When Less Than Minimum Weighing Value 108
16. Underhook 109
17. Programmable-Unit 110
18. Density (Specific Gravity) Measurement 112
19. Password Lock Function 117
19-1 Balance Software Version 1.200 117
19-2 Balance Software Version 1.211 Or Later 118
19-3 Enable Password Lock Function 119
19-4 How To Input The Password At The Start Of Weighing 120
19-5 How To Logout 121
19-6 Registering Password (Changing) 122
19-7 Changing Password 123
19-8 How To Delete The Password (USER 01 to 10) 124
19-9 Missing Password 124
20. Repeatability Check Function (GX-AE/GX-A Series Only） 125
21. Interface Specification（Standard） 126
22. Maintenance 126
22-1 Treatment Of The Balance 126
23. Troubleshooting 126
23-1 Checking The Balance Performance And Environment 126
23-2 Error Codes 128
23-3 Other Display 131
23-4 Asking For Repair 131
24. Connection With Peripheral Device 131
24-1 Command 131
24-2 Key Lock Function 131
25. How To Check The Software Version Of The Balance 131
26. Specifications 132

26-1 Common Models 132
26-1-1 Function 132
26-1-2 Dimension 132
26-2 Individual Models 133
26-2-1 0.0001g Models 133
26-2-2 0.001g Models 134
26-2-3 0.01g Models 135
26-2-4 0.1g Model 136
27. External Dimensions 137
27-1 Options And Peripheral Instruments 140

1. Introduction

This manual describes how the GX-AE/GX-A/GF-A series balance works and how to get the most out of it in terms of performance. Read this manual thoroughly before using the balance and keep it at hand for future reference.
Behavior may differ depending on the software version of your balance.
For confirmation of the software version of the balance, refer to "25. How To Check The Software Version Of The Balance".

1-1 Features

- ☐ The balance has a self-check function that inspects the balance itself using electronically controlled load (ECL) and evaluates performance. Read this manual thoroughly before using the balance and keep it at hand for future reference.
- ☐ The balance can detect impact applied to its mass sensor and display the level of that impact. ISD (Impact Shock Detection).
- ☐ Continuous change of the balance can be calculated as flow rate, displayed and output. FRD : (Flow Rate Display).
- ☐ The balance is equipped with a data memory function, which can record weighing value, calibration result, and multiple unit mass (mass per sample in counting mode) (Up to 200 items are stored for weighing value).
- ☐ The GX-AE/GX-A series has automatic self calibration using the internal mass, adapting to temperature changes, setting time and interval time.
- ☐ Good Laboratory Practice (GLP) / Good Manufacturing Practice (GMP) data can be output using the RS-232C serial interface when making the sensitivity adjustment or sensitivity calibration adjustment. It is possible to record the results using an optional printer.
- ☐ A built-in clock and calendar that can add the time and date to the output data. (Setting and changing of the time can be limited to only an administrator by using the password lock function.)
- ☐ Comparator Indicators, displaying the comparison results with HI OK LO. (Depending on the setting, 5-step comparison is also possible.)
- ☐ Capacity Indicator, displaying the weight value in percentage relative to the weighing capacity.
- ☐ Hold Function, provided for weighing a moving object such as an animal.
- ☐ Underhook, for measuring density and weighing magnetic materials.
- ☐ Using the key lock function, key operation of the balance is disabled and operations can be made by commands from an external device only.
- ☐ Users of the balance can be limited by setting a password (Password lock function).
- ☐ The balance is equipped with an RS-232C serial interface and a USB interface to communicate with a computer. Windows computer using the Windows communication tools software (WinCT) make building a system very easy. The latest Win-CT software can be downloaded from the A&D website.
  Windows is the registered trademark of the Microsoft Corporation.
- ☐ A small breeze break is included with the model featuring a readability of 0.001g.
- ☐ A glass breeze break is included with the model featuring a readability of 0.0001g.

1-2 About The Models

There are many models in the GX-AE/GX-A/GF-A series with differences in the models being their readability and weighing capacity. In this manual, they are listed collectively by the readability as shown in the table below.

Model	Readability	Applicable model		
		Internal mass with ionizer type	Internal mass type	General type
0.0001g model	0.0001g	GX-124AE GX-224AE GX-324AE	GX-124A GX-224A GX-324A	GF-124A GF-224A GF-324A
0.001g model	0.001g		GX-203A / GX-303A / GX-403A / GX-603A / GX-1003A / GX-1603A	GF-123A/ GF-203A / GF-303A /GF-403A / GF-603A /GF-1003A / GF-1603A
0.01g model	0.01g		GX-2002A / GX-3002A / GX-4002A / GX-6002A / GX-10002A	GF-1202A/ GF-2002A / GF-3002A /GF-4002A / GF-6002A /GF-10002A
0.1g model	0.1g		GX-6001A / GX-10001A	GF-6001A / GF-10001A

☐ For the GX-AE/GX-A series, a weight for sensitivity adjustment is built in. It is possible to use functions such as calibration and auto calibration using the internal mass.

☐ For the GF-A series, sensitivity adjustment weights are not built-in. When calibrating, it is necessary to prepare an external weight.

1-3 About The GX-AE Series

☐ An ionizer (static eliminator), which causes no breeze, is built into the breeze break. The ionizer can eliminate static electricity from the weighing sample before weighing, reducing error due to static electricity. (Static is eliminated by bipolar ions generated by direct-current corona discharge being projected onto the sample.)

☐ The ionizer electrodes are designed to be removed for cleaning and replacement.

☐ An IR (touchless) switch is attached to the ionizer, and static elimination can be started without touching ionizer.

☐ Power is supplied from the balance to allow the ionizer to be operated without using an AC adapter.

☐ PRINT or RE-ZERO or the static elimination function of the ionizer can be operated by using the optional foot switch (AX-SW137-PRINT or AX-SW137-REZERO).

☐ A removable glass breeze break is equipped as standard.

☐ As an option board is installed, so other options (GXA-03/04/06/09/17/23/24/25/26, FXi-08, etc.) cannot be used.

☐ For instructions on using the ionizer and IR switch, download the instruction manual for "GXA-17 Large Glass Breeze Break with Ionizer" from our website (https://www.aandd.jp) and refer to it.

Static electricity

In general, when the ambient humidity is less than 45%RH, nonconductors such as powders, paper, and plastics easily become charged with static electricity. The influence of static electricity may cause a weighing error of several milligrams. The ionizer neutralizes this electrical charge.

1-4 Compliance

Compliance with FCC Rules

Please note that this equipment generates, uses and can radiate radio frequency energy. This equipment has been tested and has been found to comply with the limits of a Class A computing device pursuant to Subpart J of Part 15 of FCC rules. These rules are designed to provide reasonable protection against interference when equipment is operated in a commercial environment. If this unit is operated in a residential area, it may cause some interference and under these circumstances the user would be required to take, at his own expense, whatever measures are necessary to eliminate the interference.

(FCC = Federal Communications Commission in the U.S.A.)

Compliance With Directives of CE mark

CE This device features radio interference suppression, safety regulation and restriction of Hazardous Substances in compliance with the following Council Directives

Council directive 2014/30/EU	EN61326	EMC directive
Council directive 2014/35/EU	EN60950	Safety of Information Technology Equipment
Council directive 2011/65/EU	EN50581	Restriction of the use of certain Hazardous Substances

The CE mark is an official mandatory European marking.

Please note that any electronic product must comply with local laws and regulations when sold or used anywhere outside Europe.

1-5 About Communication Manual

About the contents of the communication, download "Communication manual" from our website **(https://www.aandd.jp)** and refer to it.

A&D INSTRUMENTS LTD
24 Blacklands Way
Abingdon Business Park,
Abingdon, Oxford.
OX14 1DY United Kingdom
Phone: +44 (0)1235 550420
Fax: +44 (0)1235 550485
VAT Reg no. GB 596 1273 15
UK Reg. Office No. 2609110

CE

A & D Instruments Ltd. hereby declare that the following Weighing product conforms to the requirements of the council directives on …

Electromagnetic Compatibility (EMC) 2014/30/EU,
Low Voltage Equipment (LVD) 2014/35/EU and
Restriction of the use of certain Hazardous Substances (RoHS) 2011/65/EU

provided that they bear the CE mark of conformity.

Model/Series....GX-A/GF-A Series

Standards applicable:

EN 61326-1:2013
Electrical equipment for measurement, control and laboratory use -EMC requirements Part 1: General requirements
EN 60950-1:2006+A11:2009+A1:2010+A12:2011+A2:2013
Safety of Information Technology Equipment
EN 50581:2012
Technical documentation for the assessment of electrical and electronic products with respect to the restriction of hazardous substances

CE Mark first applied 16 October 2017
Signed for A&D Instruments in Oxford England 27 November 2017

J. Ghuman
Managing Director

2. Part Names, Installation And Precautions

The balance is a precision instrument. Unpack it carefully. The packing contents depend on the balance model. See the illustrations to confirm that everything is included. When options are combined at time of shipping, optional accessories may be included.
Keep the packing material to be used for transporting the balance in the future.

GX-AE / GX-A / GF-A 0.0001g models

GX-A/GF-A
Glass Breeze Break

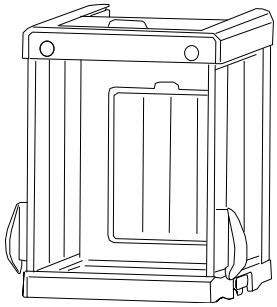

GX-AE
Glass Breeze Break with Ionizer

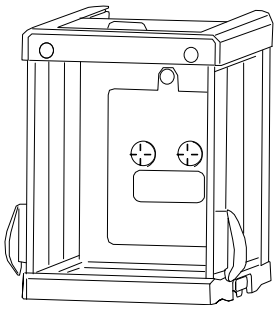

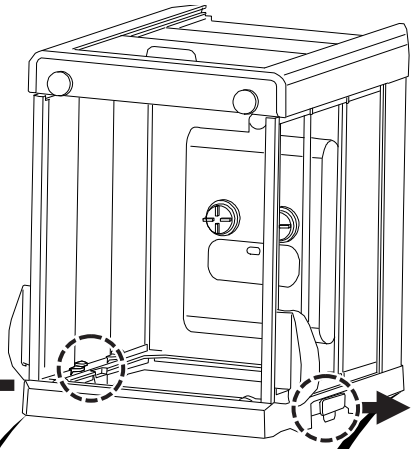

Pull out the left and right locking handles.

Breeze break ring

Weighing pan

Bubble spirit level

Display

Keys

Main unit

Leveling foot

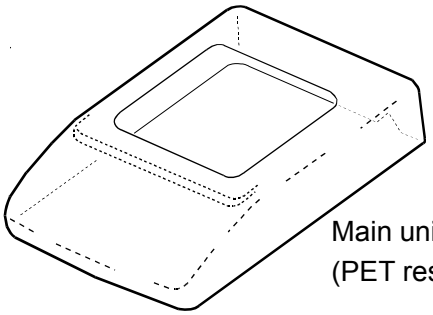

Main unit cover
(PET resin)

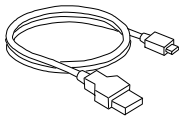

USB cable (approx. 1.8m)

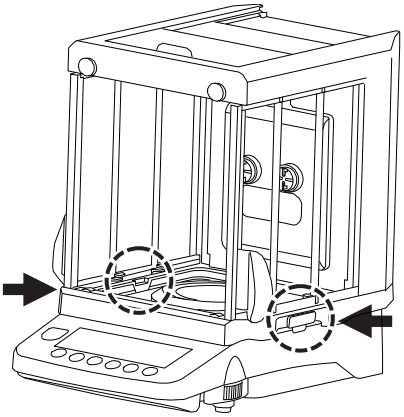

Press the left and right locking handles to secure the breeze break to the balance.

Rear of main unit

Each model that includes a glass breeze break with ionizers (GX-124AE / GX-224AE / GX-324AE) has an ionizer connector, IR sensor connector and external key jack.

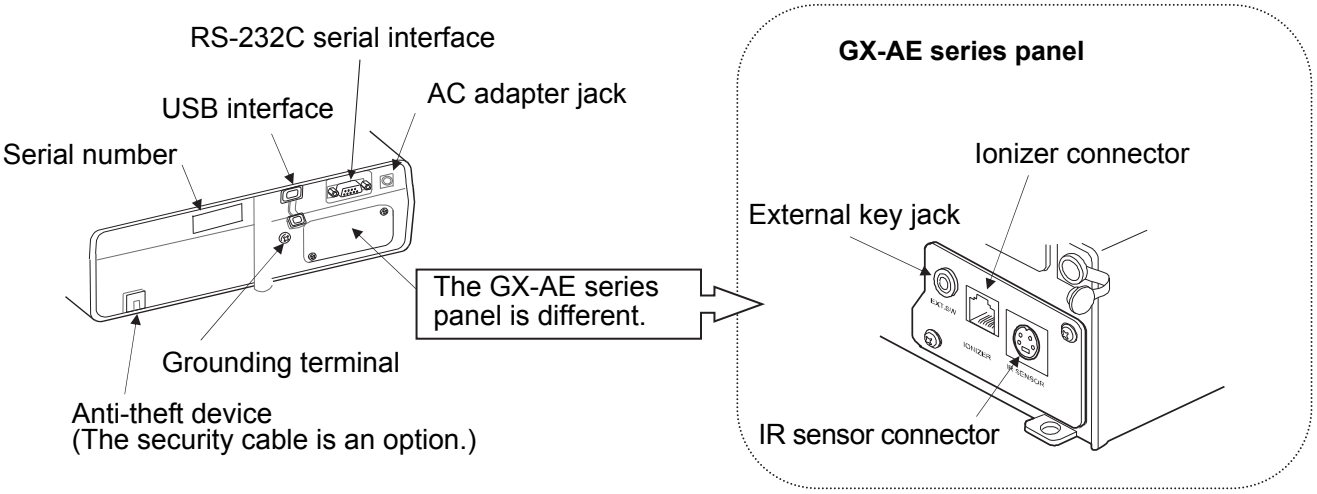

Connecting the glass breeze break with ionizer and the IR sensor

Type: GX-124AE／GX-224AE／GX-324AE

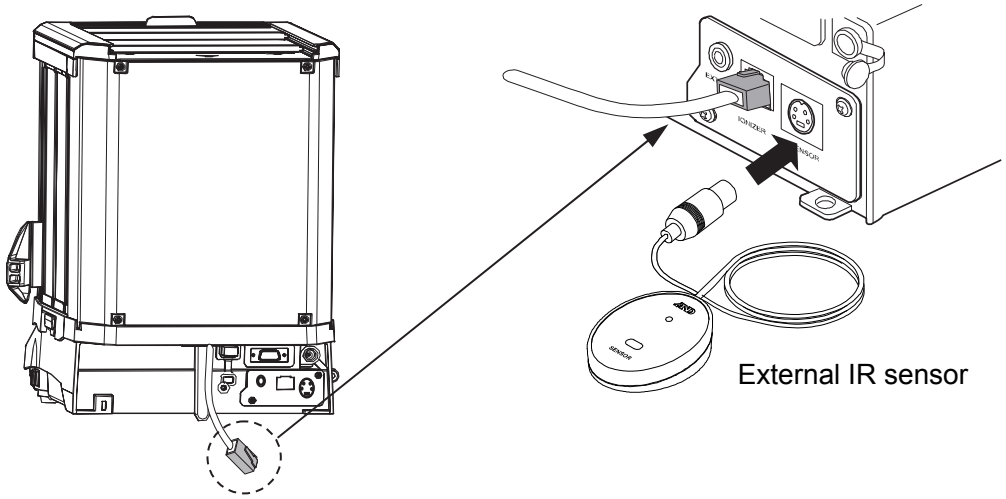

☐ Insert the cable extending from the rear of the breeze break into the ionizer connector at the rear of the balance.

☐ Insert the IR sensor plug into the IR sensor connector at the rear of the balance.

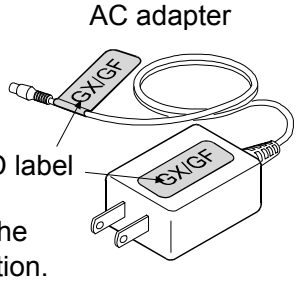

Attach the AC adapter label to the adapter as shown in the illustration.

Note

☐ Please confirm that the AC adapter type is correct for your local voltage and receptacle type.

☐ Please use the specified dedicated AC adapter for the balance.

☐ Do not use the included AC adapter for models that are not considered compatible with the AC adapters.

☐ If you use the wrong AC adapter, the balance and other equipment may not operate properly.

GX-A / GF-A 0.001g models

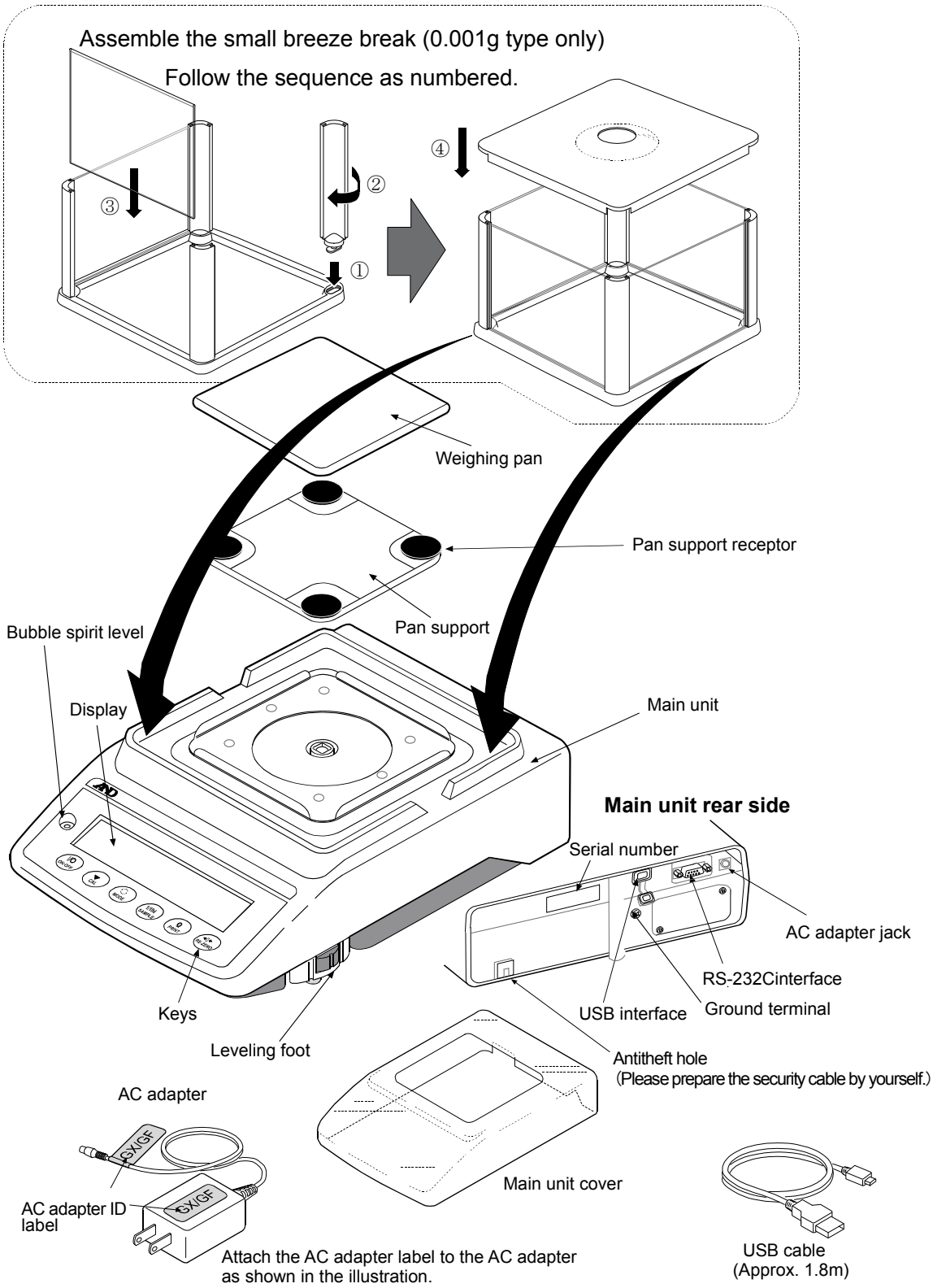

Note

☐ Please confirm that the AC adapter type is correct for your local voltage and receptacle type.

☐ Please use the specified dedicated AC adapter for the balance.

☐ Do not use the included AC adapter for models that are not considered compatible with the AC adapters.

☐ If you use the wrong AC adapter, the balance and other equipment may not operate properly.

GX-A / GF-A 0.01g/0.1g models

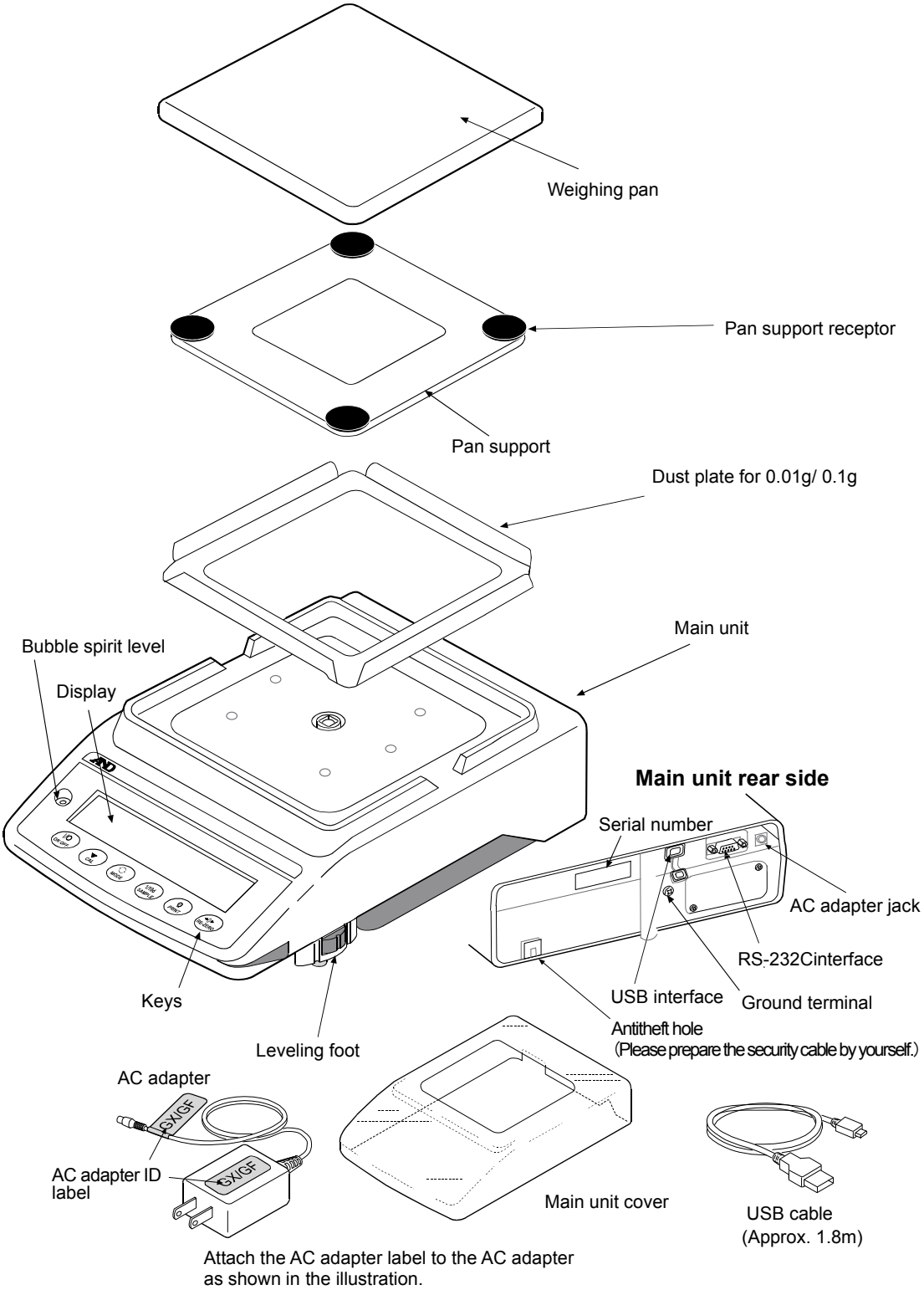

Note

☐ Please confirm that the AC adapter type is correct for your local voltage and receptacle type.

☐ Please use the specified dedicated AC adapter for the balance.

☐ Do not use the included AC adapter for models that are not considered compatible with the AC adapters.

☐ If you use the wrong AC adapter, the balance and other equipment may not operate properly.

2-1 Installing The Balance

Install the balance as follows:

1. Refer to “2-2 Precautions” for installing the balance.
2. Assemble the balance as shown in the illustration above.
3. Adjust the leveling feet to level the balance. Confirm it using the bubble spirit level.
4. Confirm that the adapter type is correct for the local voltage and power receptacle type.
5. Connect the AC adapter to the balance. Warm up the balance for at least 30 minutes with nothing on the weighing pan.

2-2 Precautions

To get the optimum performance from the balance and acquire accurate weighing data, note the following:

☐ Install the balance in an environment where the temperature and humidity are not excessive. The best operating temperature is about 20℃±2℃ at about 45～60%RH relative humidity.
☐ Install the balance where it is free of dust.
☐ The weighing table should be solid, free from vibration and drafts, and as level as possible. (An anti-vibration table or stone table is ideal)
☐ Install the balance in a stable place avoiding vibration and shock. Corners of rooms on the first floor are best, as they are less prone to vibration.
☐ Install the balance where it is not affected by heaters or air conditioners.
☐ Install the balance where it is not exposed to direct sunlight.
☐ Install the balance away from equipment which produces magnetic fields.
☐ Level the balance by adjusting the leveling feet and confirm it using the bubble spirit level.
☐ Warm up the balance for at least 30 minutes. Plug in the AC adapter as usual.
☐ Calibrate the balance before use or after having moved it to another location. Refer to "7. Calibration".

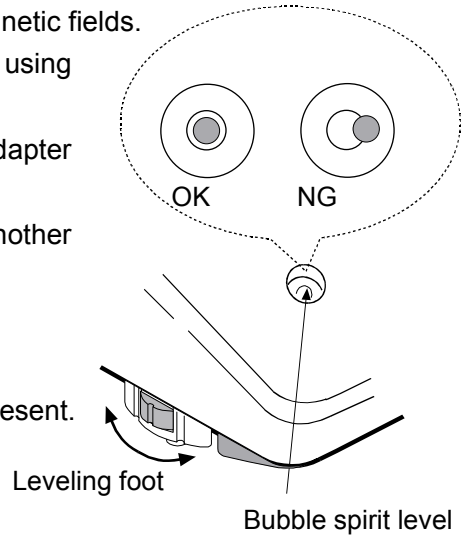

Caution

Do not install the balance where flammable or corrosive gas is present.

How to adjust the bubble spirit level

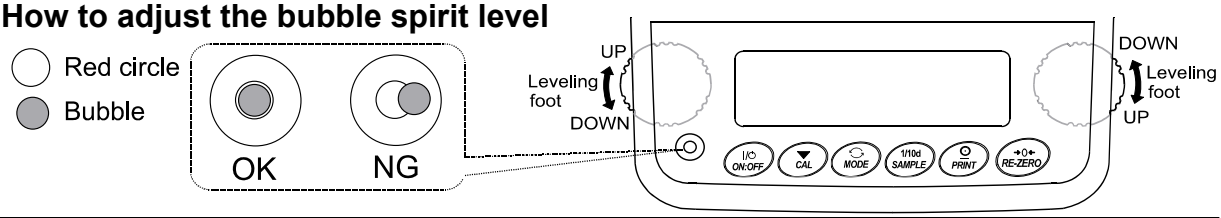

When the bubble is off to the left:
Turn the leveling foot on the front right in the clockwise direction.

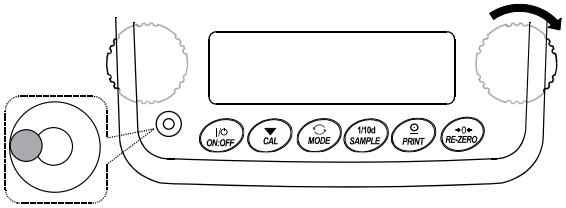

When the bubble is off to the right:
Turn the leveling foot on the front left in the clockwise direction

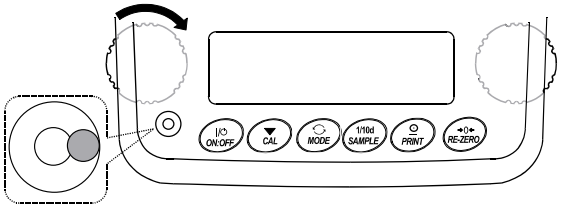

When the bubble is off to the backward position:
Turn both leveling feet on the front in the clockwise direction at the same time.

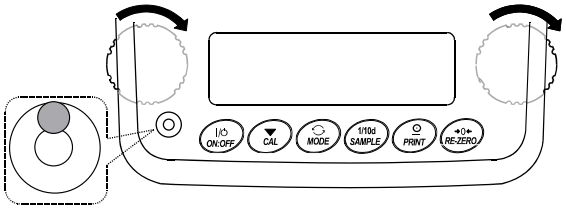

When the bubble is off to the forward position:
Turn both leveling feet on the front in the counter clockwise direction at the same time.

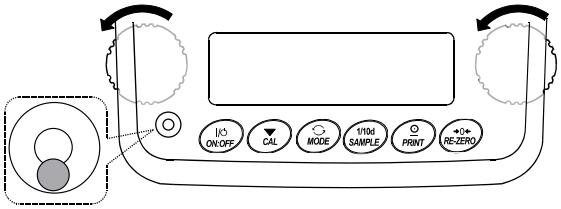

2-3 During Use

To acquire accurate weighing data, note the following:

☐ Discharge static electricity from the material to be weighed. When a sample could have a static charge, the weighing data is influenced. If the ambient humidity becomes 45% or less, insulators such as plastics are liable to become static electricity. Ground the balance and try the following.

- An anti-static treatment has been applied to the breeze break components.
- Eliminate the static electricity by GXA-25, AD-1683 as an accessory.
- Or try to keep highly the ambient humidity
- Or use a metal shield case.
- Or wipe a charged plastic sample with the wet cloth.

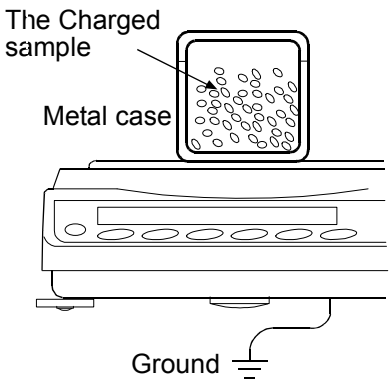

☐ The breeze break (0.001g models only) and the clear main unit cover are provided as accessories. The breeze break components may be charged with static electricity when they are unpacked or when the humidity is low. If the weighing value is unstable or the balance has a problem with repeatability, remove the breeze break. Or wipe the clear plates with a moistened cloth, use an accessory DC static eliminator, GXA-25, AD-1683 or apply an anti-static spray.

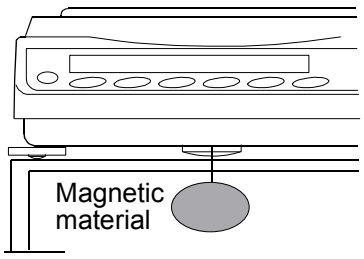

☐ This balance uses a strong magnet as part of the balance assembly, so please use caution when weighing magnetic materials such as iron. If there is a problem, use the underhook

on the bottom of the balance to suspend the material away from the influence of the magnet.

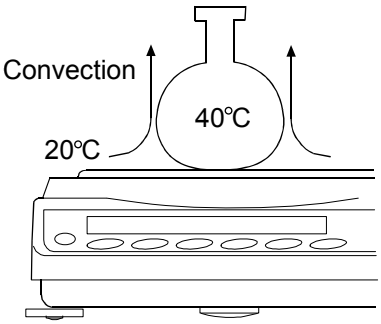

- ☐ Cancel the temperature difference between a sample and the environment. When a sample is warmer (cooler) than the ambient temperature, the sample will be lighter (heavier) than the true weight. This error is due to a rising (falling) draft around the sample.
- ☐ Make each weighing gently and quickly to avoid errors due to changes in the environmental conditions.
- ☐ When placing a sample on a weighing pan, do not give a strong shock or do not exceed the weighing capacity. And place in the center.
- ☐ Do not drop things upon the weighing pan, or place a sample on the pan that is beyond the balance weighing capacity. Place a sample in the center of the weighing pan.
- ☐ Do not use a sharp instrument such as a pencil to press the keys. Use your finger only.
- ☐ Press the RE-ZERO key before each weighing to prevent possible errors.
- ☐ Take into consideration the affect of air buoyancy on a sample when more accuracy is required.
- ☐ Keep the balance interior free of dust and foreign materials.

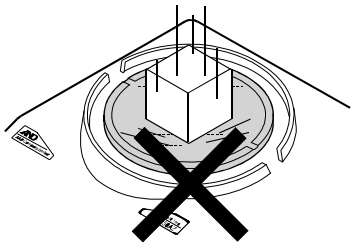

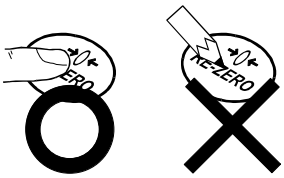

2-4 After Use

- ☐ Avoid mechanical shock to the balance.
- ☐ Do not disassemble the balance. Contact the local A&D dealer if the balance needs service or repair.
- ☐ Do not use organic solvents to clean the balance. Clean the balance with a lint free cloth that is moistened with warm water and a mild detergent.
- ☐ Avoid dust and water so that the balance weighs correctly. Protect the internal parts from liquid spills and excessive dust.

2-5 Power Supply

- ☐ When the AC adapter is connected, the balance is in the standby mode if the standby indicator is on. This is a normal state and does not harm the balance. For accurate weighing, keep the AC adapter connected to the balance and AC power unless the balance is not to be used for a long period of time. Please warm up the balance for at least 30 minutes (one hour for 0.0001g models).

3.Display Symbols And Key Operation

Display symbols

- Number of statistical data (Statistical calculation mode)
- Displays the weight data relative to the weighing capacity, in percentage, in the weighing mode **(Capacity indicator)**

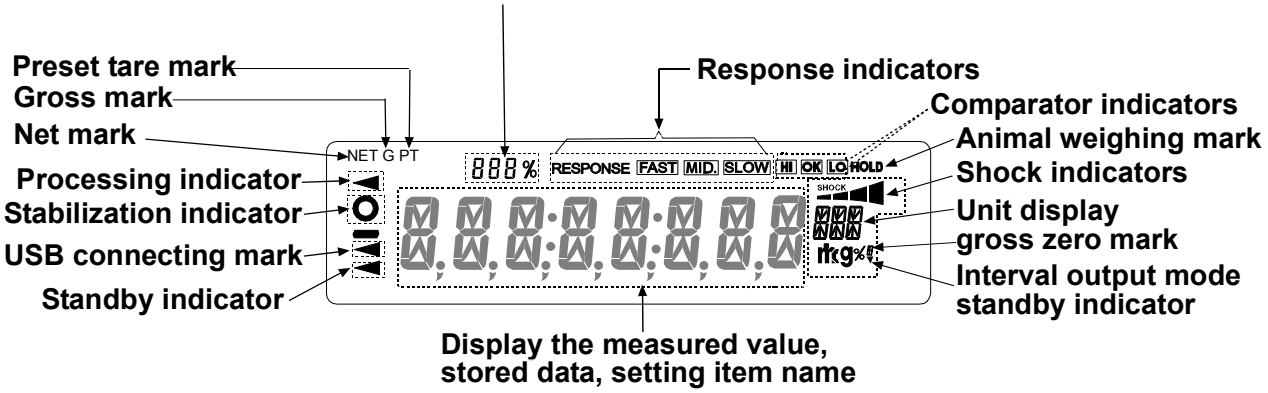

Blinking display contents

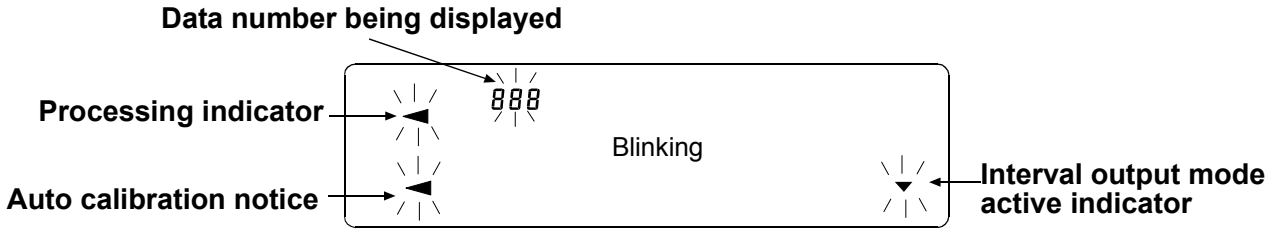

Key operation

Key operations affect how the balance functions. Normal key operation during measurement is “Press and release the key immediately” or “Press the key”. Please do not “Press and hold the key (for 2 seconds)” unless is required.

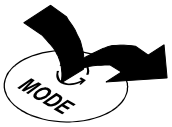

Press the key
(Press and release the key immediately.)

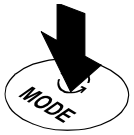

Press and hold the key
for 2 seconds.

Key	When pressed and released	When pressed and held (for 2 seconds)
I/⏻ ON:OFF	Turns the display [ON:OFF]. The standby indicator is displayed when the display is turned off. The weighing mode is enabled when the display is turned on. When password function is enable, password input display will be displayed. Refer to "19-4 How to Input The Password At The Start Of Weighing" This [ON:OFF] key is available anytime. Pressing the [ON:OFF] key during operation will interrupt operation and turn the display OFF. *	
1/10d SAMPLE	In the weighing mode, turns the digit for readability on and off. In the counting or percent mode, enters the sample storing mode.	・Enters the function table mode. Please refer to "9. Function Table". ・Runs the repeatability check function when pressed and held for another 2 seconds after the function table menu is displayed. Please refer to "20. Repeatability Check Function". (GX-AE / GX-A series only)
MODE	Switches the weighing units stored in the function table. Refer to “4. Weighing”. Displaying of the unit mg is available for 0.0001g models only.	Displays other items of the calibration menu. Please refer to "6-2 Self Check Function/ Automatic Setting Of Minimum Weighing Value by ECL".
▼ CAL	Performs calibration of the balance using the internal mass. (GX-AE/GX-A series)	Displays other items of the calibration menu.
⊙ PRINT	Stores the weighing data in memory or outputs to a printer or personal computer depending on the function table settings. (Factory setting = output)	Enters mode to change the unit mass registration number in counting mode. By changing the function table: ・Outputs "Title block" and "End block" for GLP, GMP report. ・Displays the data memory menu. ・Enters mode for reading density number in flow measurement.
→0← RE-ZERO	Sets the display to zero.	

* When the "Gross net tare function" is selected, the display is turned off by pressing and holding (for 2 seconds). Please refer to "14. Gross Net Tare Function".

4. Weighing

4-1 Units

With the GX-AE/GX-A/GF-A series balance, the following weighing units and weighing modes are available:
Note: The unit "mg" is available for the 0.0001g models only. "mg" is displayed after "g" on 0.0001g models.

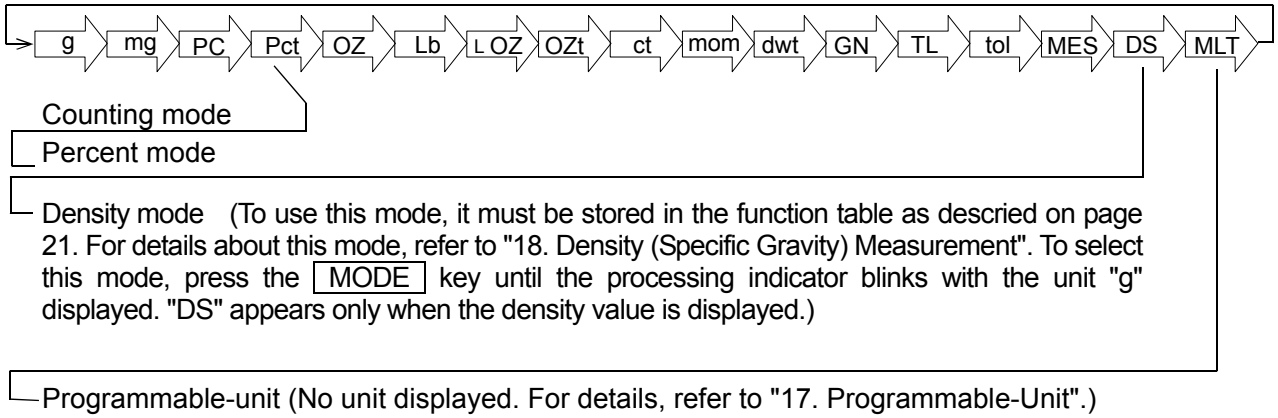

A unit or mode can be selected and stored in the function table as described on page 21.
If a weighing mode (or unit of weight) has been turned off, that mode or unit will be missing in the sequence. Tael has four varieties, one of which can be selected and installed at the factory.

To select a unit or mode for weighing, press the MODE key.

For details about the units and modes, see the table below:

Name (unit, mode)	Abbrev.	Display	Function table (Storing mode)	Conversion factor 1 g =
Gram	g	g	g	1 g
Milligram	mg	mg	mg	0.001 g
Counting mode	PCS	PCS	PCS	——
Percent mode	%	%	%	——
Ounce (Avoir)	OZ	OZ	OZ	28.349523125 g
Pound	Lb	Lb	Lb	453.59237 g
Pound/Ounce	L OZ	L OZ	LO	1Lb=16 oz, 1 oz=28.349523125 g
Troy Ounce	OZt	OZt	OZt	31.1034768 g
Metric Carat	ct	ct	ct	0.2 g
Momme	mom	mom	mom	3.75 g
Pennyweight	dwt	dwt	dwt	1.55517384 g
Grain (UK)	GN	GN	GN	0.06479891 g
Tael (HK general, Singapore)	TL	TL	TL	37.7994 g
Tael (HK jewelry)				37.429 g
Tael (Taiwan)				37.5 g
Tael (China)				31.25 g
Tola (India)	tol	tol	tol	11.6638038 g
Messghal	MES	MES	MES	4.6875 g
Density mode (See note below)	DS	g DS is used to show the density.	DS	——
Programmable-unit (Multi-unit)	MLT	MLt	MLt	——

Note: The blinking processing indicator with "g" indicates that the density mode is selected.

The tables below indicate the weighing capacity and the readability for each unit, depending on the balance model.

Unit	GX-124AE GX-124A GF-124A	GX-224AE GX-224A GF-224A	GX-324AE GX-324A GF-324A	Readability
	Capacity			
Gram	122	220	320	0.0001
Milligram	122000	220000	320000	0.1
Ounce (Avoir)	4.30	7.05	10.50	0.00001
Troy Ounce	3.92	6.43	9.64	0.00001
Metric Carat	610	1000	1500	0.001
Momme	32.5	53.3	80.0	0.0001
Pennyweight	78.4	128	192	0.0001
Grain (UK)	1882	3086	4629	0.002
Tael (HK general, Singapore)	3.22	5.29	7.93	0.00001
Tael (HK jewelry)	3.25	5.34	8.01	0.00001
Tael (Taiwan)	3.25	5.33	8.00	0.00001
Tael (China)	3.90	6.40	9.60	0.00001
Tola (India)	10.4	17.1	25.7	0.00001
Messghal	26.0	42.6	64.0	0.0001

Unit		GX-203A	GX-303A	GX-403A	GX-603A	GX-1003A	GX-1603A	Readability
	GF-123A	GF-203A	GF-303A	GF-403A	GF-603A	GF-1003A	GF-1603A	
	Capacity							
Gram	122	220	320	420	620	1100	1620	0.001
Ounce (Avoir)	4.30	7.76	11.28	14.81	21.86	38.80	57.14	0.00005
Pound	0.268	0.485	0.705	0.925	1.366	2.425	3.571	0.000005
Pound/Ounce	0Lb 4.30oz	0Lb 7.76oz	0Lb 11.28oz	0Lb 14.81oz	1Lb 5.86oz	2Lb 6.80oz	3Lb 9.14oz	0.01oz
Troy Ounce	3.92	7.07	10.28	13.50	19.93	35.36	52.08	0.00005
Metric Carat	610	1100	1600	2100	3100	5500	8100	0.005
Momme	32.5	58.6	85.3	112.0	165.3	293.3	432.0	0.0005
Pennyweight	78.4	141	205	270	398	707	1041	0.001
Grain (UK)	1882	3395	4938	6481	9568	16975	25000	0.02
Tael (HK general, Singapore)	3.22	5.82	8.46	11.11	16.40	29.10	42.85	0.00005
Tael (HK jewelry)	3.25	5.87	8.54	11.22	16.56	29.38	43.28	0.00005
Tael (Taiwan)	3.25	5.86	8.53	11.20	16.53	29.33	43.20	0.00005
Tael (China)	3.90	7.04	10.24	13.44	19.84	35.20	51.84	0.00005
Tola (India)	10.4	18.8	27.4	36.0	53.1	94.3	138.8	0.0001
Messghal	26.0	46.9	68.2	89.6	132.2	234.6	345.6	0.0005

Unit		GX-2002A	GX-3002A	GX-4002A	GX-6002A	GX-10002A	Readability
	GF-1202A	GF-2002A	GF-3002A	GF-4002A	GF-6002A	GF-10002A	
	Capacity						
Gram	1220	2200	3200	4200	6200	10200	0.01
Ounce (Avoir)	43.0	77.6	112.8	148.1	218.6	359.7	0.0005
Pound	2.68	4.85	7.05	9.25	13.66	22.48	0.00005
Pound/Ounce	2Lb 11.03oz	4Lb 13.60oz	7Lb 0.87oz	9Lb 4.15oz	13Lb 10.69oz	22Lb 7.79oz	0.01oz
Troy Ounce	39.2	70.7	102.8	135.0	199.3	327.9	0.0005
Metric Carat	6100	11000	16000	21000	31000	51000	0.05
Momme	325	586	853	1120	1653	2720	0.005
Pennyweight	784	1414	2057	2700	3986	6558	0.01
Grain (UK)	18827	33951	49383	64815	95680	157410	0.2
Tael (HK general, Singapore)	32.2	58.2	84.6	111.1	164.0	269.8	0.0005
Tael (HK jewelry)	32.5	58.7	85.4	112.2	165.6	272.5	0.0005
Tael (Taiwan)	32.5	58.6	85.3	112.0	165.3	272.0	0.0005
Tael (China)	39.0	70.4	102.4	134.4	198.4	326.4	0.0005
Tola (India)	104	188	274	360	531	874	0.001
Messghal	260	469	682	896	1322	2176	0.005

Unit	GX-6001A	GX-10001A	Readability
	GF-6001A	GF-10001A	
	Capacity		
Gram	6200	10200	0.1
Ounce (Avoir)	218	359	0.005
Pound	13.6	22.4	0.0005
Pound/Ounce	13Lb 10.69oz	22Lb 7.79oz	0.01oz
Troy Ounce	199	327	0.005
Metric Carat	31000	51000	0.5
Momme	1653	2720	0.05
Pennyweight	3986	6558	0.1
Grain (UK)	95680	157410	2
Tael (HK general, Singapore)	164.0	269.0	0.005
Tael (HK jewelry)	165.0	272.0	0.005
Tael (Taiwan)	165.0	272.0	0.005
Tael (China)	198.0	326.0	0.005
Tola (India)	531.0	874.0	0.01
Messghal	1322	2176	0.05

Storing Units

The units or modes can be selected and stored in the function table. The sequence of displaying the units or modes can be arranged to fit the frequency of use.
The units stored are maintained in non-volatile memory, even if the AC adapter is removed.

Select a unit or mode and arrange the sequence of display as follows:

1. Press and hold the [SAMPLE] key until [bASFnc] of the function table is displayed, then release the key.
2. Press the [SAMPLE] key several times to display [Unit].
3. Press the [PRINT] key to enter the unit selection mode.
4. Specify a unit or mode in the order to be displayed using the following keys.
   [SAMPLE] key····· To sequentially display the units.
   [RE-ZERO] key ···· To specify a unit or mode. The stabilization indicator [O] appears when the displayed unit or mode is specified.
   If the key is pressed in units already selected, the stability mark disappears.
5. Press the [PRINT] key to store the units or modes. The balance displays [End] and then displays the next menu of the function table.
6. Press the [CAL] key to exit the function table. Then the balance returns to the weighing mode with the selected unit.
7. To select other unit or mode for weighing, press the [MODE] key.

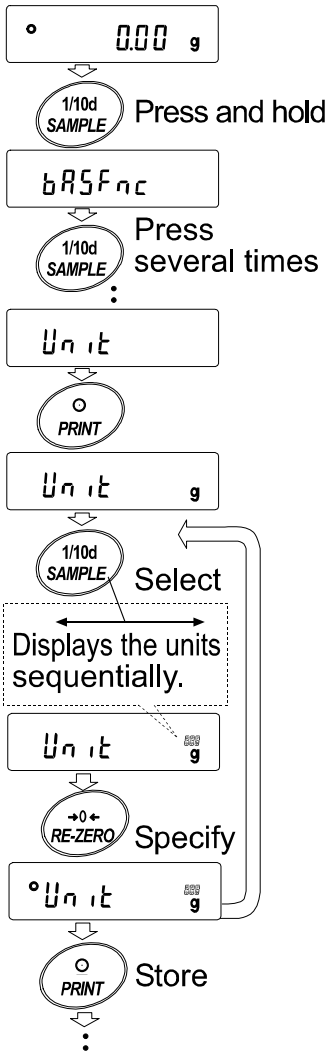

Unit setting example

The example below sets the units in the order with g (gram) as the first unit followed by pcs (counting mode).

1. Press and hold the [SAMPLE] key until [bASFnc] of the function table is displayed, then release the key.
2. Press the [SAMPLE] key several times to display [Unit].
3. Press the [PRINT] key to enter the unit selection mode.
4. Press the [RE-ZERO] key to specify the unit of g
   The stabilization indicator [O] appears when the unit is specified.
5. Press the [SAMPLE] key to display [Unit PCS].
6. Press the [RE-ZERO] key to specify the unit of pcs.
   The stabilization indicator [O] appears when the unit is specified.
7. Press the [PRINT] key to store the units.
   The balance displays [End] and then displays the next menu item of the function table.
8. Press the [CAL] key to exit the function table. Then the balance returns to the weighing mode with g, the unit selected first.
9. Press the [MODE] key to switch between g and pcs (g→pcs).

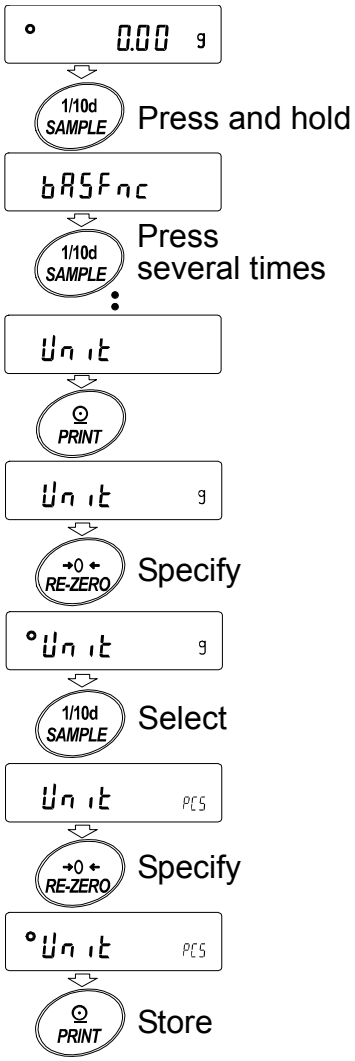

4-2 Basic Operation

1. Press [MODE] key, and then select the appropriates units
   In this case, select "g".
2. Place a container on the weighing pan, if necessary.
   Press the [RE-ZERO] key to cancel the weight (tare).
   The balance displays [0.00 g]. (The decimal point position depends on the balance model.)
3. Place a sample on the pan or in the container. Wait for the stabilization indicator [o] to be displayed. Read the value.
4. Remove the sample and container from the pan.

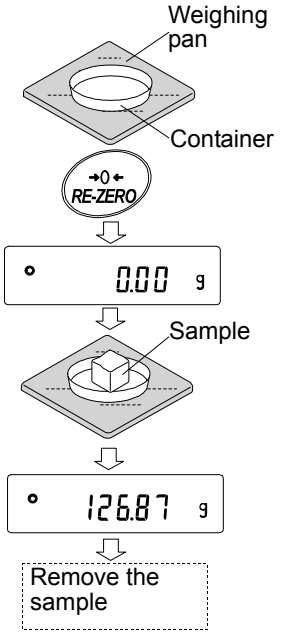

Note

- ☐ Press the [SAMPLE] key to turn on or off the digit for the readability.
- ☐ The weighing data can be stored in memory. For details, refer to “11. Data Memory”.
- ☐ When the [ON:OFF] key is pressed with a container placed on the weighing pan and weighing is started, the balance automatically cancels the weight (tare) and displays [0.00 g].

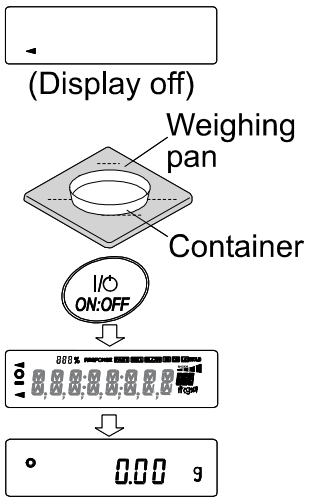

About the operation at when power is turned on

The balance will determine the reference zero point when the ON:OFF key is pressed to enter the weighing mode.

Depending on the load condition at that time, it will automatically judge whether to perform zero or tare operation. The condition for determining which is used is "power on zero range", and when power on zero range is exceeded, the tare subtraction operation is performed.

About re-zero operation

By pressing the RE-ZERO key, the display can be changed to zero.

Re-zero with the RE-ZERO key will automatically determine whether zero or tare operation is performed.

The condition for determining which is used is "zero range", and when zero range is exceeded, the tare subtraction operation is performed.

About measurement range

For the balance, the range that can be weighed is determined by model.

The total amount (net amount + tare quantity) up to the maximum display of each model is displayed, and when the maximum display is exceeded, E is displayed to indicate that the weighing range is exceeded.

When in excess in negative, -E is displayed.

Model		Power on zero range	Zero range	-E display range
GX-124AE, GX-124A	GF-124A	Approx.±50g	Approx.±2g	Approx.-50g or less
GX-224AE, GX-224A	GF-224A		Approx.±4g	
GX-324AE, GX-324A	GF-324A		Approx.±6g	
	GF-123A	Approx.±100g	Approx.±2g	Approx.-100g or less
GX-203A	GF-203A		Approx.±4g	
GX-303A	GF-303A		Approx.±6g	
GX-403A	GF-403A		Approx.±8g	
GX-603A	GF-603A		Approx.±12g	
GX-1003A	GF-1003A		Approx.±20g	
GX-1603A	GF-1603A		Approx.±32g	
	GF-1202A	Approx.±1kg	Approx.±20g	Approx.-1kg or less
GX-2002A	GF-2002A		Approx.±40g	
GX-3002A	GF-3002A		Approx.±60g	
GX-4002A	GF-4002A		Approx.±80g	
GX-6002A	GF-6002A		Approx.±120g	
GX-10002A	GF-10002A		Approx.±200g	
GX-6001A	GF-6001A	Approx.±1kg	Approx.±120g	Approx.-1kg or less
GX-10001A	GF-10001A		Approx.±200g	

4-3 Counting Mode（PCS）

This is the mode to determine the number of objects in a sample based on the standard sample unit mass. Unit mass means the mass of one sample. The smaller the variables in each sample unit mass is, the more accurate the counting will be. This series balance is equipped with the Automatic Counting Accuracy Improvement (ACAI) function to improve the counting accuracy.

Note

* For counting, use samples that have a unit mass at least ten times greater than that of the readability in grams.
* If the sample unit mass variable is too large, it may cause a counting error.
* To improve the counting performance, use the ACAI function frequently or divide the samples into several groups and count each group.

Selecting the counting mode

1. Press the [MODE] key to select [PCS] （ PCS = unit）

Storing a sample unit mass

2. Press the [SAMPLE] key to enter the sample unit mass storing mode. Even in the storing mode, pressing the [MODE] key will switch to the next mode.

3. To select the number of samples, press the [SAMPLE] key several times. It may be set to 5, 10, 25, 50 or 100.

Note

A greater number of samples will yield more accurate counting result.

4. Place a container on the weighing pan, if necessary. Press the [RE-ZERO] key to cancel the weight (tare). The number specified in step 3 appears. [25.0] is displayed if 25 is selected in "3".

5. Place the number of samples specified on the pan. In this example, 25 pieces.

6. When [PRINT] key pressed, unit mass is stored and changes the count display. (Ex: when the number is 25, [25 PCS] is displayed.

Note

* If the balance judges that the mass of the samples is too light to acquire accurate weighing, it displays an error requiring the addition of more samples to the specified number and press the [PRINT] key. When the unit mass is stored correctly, the balance proceeds to the counting mode.

* If the balance judges that the mass of the samples is too light and is not adequate to be used as the unit mass, it displays [Lo].

* Registered unit mass is remembered even when the power is turned off.

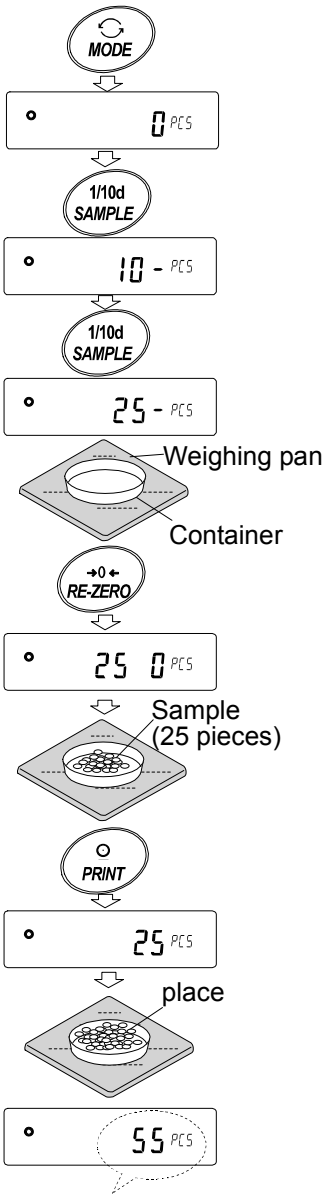

(The counting result)

Number mode（counting）

7. Counting is possible.

Counting Mode Using The ACAI Function

The ACAI is a function that improves the accuracy of the unit mass automatically by increasing the number of samples as the counting process.

ACAI: Automatic Counting Accuracy Improvement

After registering unit mass of "6", proceed to the following "8".

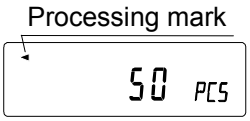

8. If a few more samples are added, the processing indicator turns on. To prevent an error, add three or more. The processing indicator does not turn on if overloaded. Try to add the same number of samples as displayed.
9. The balance re-calculates the unit mass while the processing indicator is blinking. Do not touch the balance or samples on the pan until the processing indicator turns off.
10. Counting accuracy is improved when the processing indicator turns off.
    Each time the above operation is performed, a more accurate unit mass will be obtained. There is no definite upper limit of ACAI range for the number of samples exceeding 100. Try to add the same number of samples as displayed.
11. Remove all the samples used in ACAI and proceed with the counting operation using the improved unit mass.

Note ACAI will not function on the unit mass entered using the keys, or digital input mode.

Storing the unit mass

By using the data memory function, 50 instances of storing a sample unit mass can be stored.

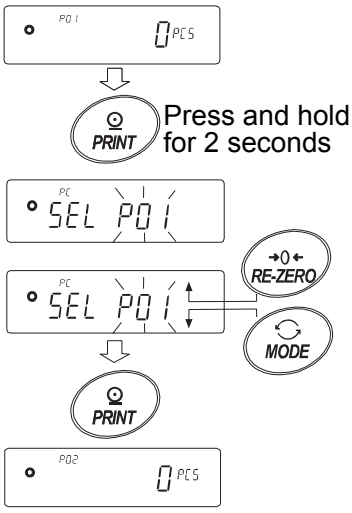

1. Set the function setting item "Data memory function (dAtA) " to "Stores unit mass in counting (dAtA1) " .
   Refer to "9. Function Table".
2. The displayed " P ** " is the selected unit mass registration number.
3. Press and hold the [PRINT] key for 2 seconds to switch to the mode to change the unit mass registration number.
   [RE-ZERO] key ····· Changes the registration number(+)
   [MODE] key ····· Changes the registration number (-)
   [PRINT] key ····· Decides on the displayed registration number.
   [CAL] key····· Cancel the displayed registration number.
4. Multiple unit masses can be stored by registering them with different unit mass registration numbers.
   □ P **: The unit weight registration number is entered.

Note

☐ Unit weight can be read by " UN:mm " command.
(mm corresponds to P01 to P50 with 01 to 50.)

☐ The read unit mass can output by " ?UW " command and can be changed by " UW " command.

Caution

* ACAI cannot be used for the read unit mass.

4-4 Percent Mode (%)

The percent mode displays the weighting value in percentage compared to a 100% reference mass and is used for target weighing or checking the sample variance.

Selecting The Percent Mode

1. Press the [MODE] key to select the unit [%] (Percent mode).

Storing The 100% Reference Mass

2. Press the [SAMPLE] key to enter the 100% reference mass storing mode.
   Even in the storing mode, pressing the [MODE] key will switch to the next mode.
3. Place a container on the weighing pan, if necessary. Press the [RE-ZERO] key to cancel the weight (tare). The balance displays [100.00 %].
4. Place the sample to be set as the 100% reference mass on the pan or in the container.
5. Press the [PRINT] key to store the reference mass.
   The balance displays [100.00 %]. (The decimal point position depends on the reference value. The reference mass stored, even if the AC adapter is removed, is maintained in non-volatile memory.)

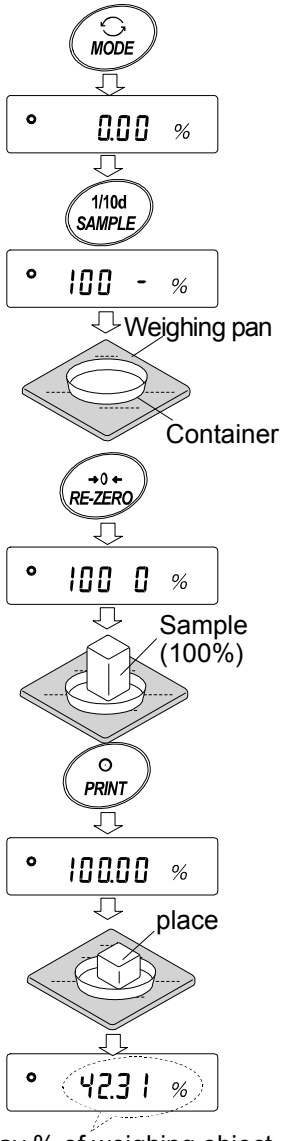

Display % of weighing object

Note

- ☐ If the balance judges that the mass of the sample is too light to be used as a reference, it displays [Lo].
- ☐ The displayed percentage is based on the 100% reference mass.

Model	100% mass	Decimal point position
Readability 0.0001g	0.0100g ~ 0.0999g	1%
	0.1000g ~ 0.9999g	0.1%
	1.0000g ~	0.01%
Readability 0.001g	0.100g ~ 0.999g	1%
	1.000g ~ 9.999g	0.1%
	10.000g ~	0.01%
Readability 0.01g	1.00g ~ 9.99g	1%
	10.00g ~ 99.99g	0.1%
	100.00g ~	0.01%
Readability 0.1g	1.0g ~ 9.9g	1%
	10.0g ~ 99.9g	0.1%
	100.0g ~	0.01%

- ☐ Registered values are stored even when the power is turned off.

Reading the percentage

6. Please a sample to be compared to the reference mass on the pan. The displayed percentage is based on the 100% reference mass.

4-5 Animal Weighing Mode（Hold Function）

This is the mode to weigh a moving object such as an animal, even when the display of the weighing data fluctuates. The hold function allows the average weight of the animal to be displayed. To use the hold function, set the function in the function table. Refer to "9. Function Table" and "9-3 Description Of The Class Environment Display" for details.

5. Impact Detection Function

The GX-AE/GX-A/GF-A series has a function to detect impact to the mass sensor section and to display the impact level.

By lowering the impact level at the time of loading, it is possible not only to alleviate variation in the weighing value but also to reduce the risk of failure of the mass sensor section.

Especially when incorporating the balance in a production line, etc. and weighing by means such as an automated system, impact to the sensor may be applied greater than expected.
When designing automatic systems and the like, it is recommended that you minimize the impact level as much as possible while checking the shock indicator.

Impact level display is from level 0 to level 4, 5 level.

Impact level	Shock indicator	Buzzer	Contents
0	No	No	Safe
1	SHOCK	No	Caution
2	SHOCK	No	Caution：Consider impact mitigation
3	SHOCK	One beep	Warning：Do not apply greater impact
4	SHOCK	Two beep	Danger：Sensor may be damaged

With balance software version 1.300 or later, you can turn off the impact detection function by setting bASFnc／i5d of the function settings to 0.
Even if the impact detection function is turned off, it records in the balance when there is a shock.

Note

☐ Impact on the weighing sensor may be applied to the weighing pan at time of loading, or it may be applied from the table on which the balance is installed.
The impact detection function also works for impact applied from the table.

5-1 Recording Impact History

Impacts of impact level 3 or higher are stored on the balance with data and time included (maximum 50 data instances).

When the password lock function is on (Lock 1 or Lock 2), the login user information is added when outputting the impact history. (Balance software version 1.211 or later.)

Note

- ☐ If 50 data instances is exceeded, the data with the lowest impact level is overwritten.
- ☐ The stored impact history cannot be deleted.
- ☐ Impact data where the balance is not energized (during transport, etc.) is not stored.

5-2 Output Impact History

The stored impact history can be output by sending a specified command to the balance or performing a key operation.

Note

- ☐ The impact history format differs according to the software version of the balance.

Output by command

The stored impact data will be output all at once by sending a ?SA command to the balance.

Output by key operation

1. Press the [ON:OFF] key to turn off the display.
2. With the display off, press the [ON:OFF] key while holding down the [MODE] key.
3. -LIST- is displayed, and the stored impact data is output all at once.

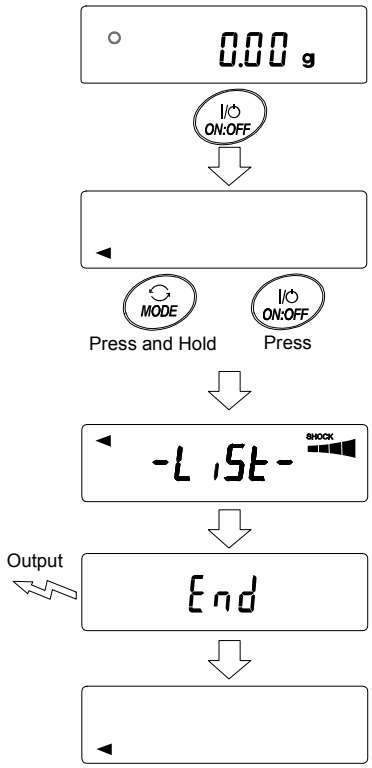

Impact history output example

The impact history format differs according to the software version of balance.

☐ For balance software version 1.200

Date, time, and impact level are each output on a separate line.

Output example

2018/05/29,11:08:18,SHOCK LV4

☐ For balance software version 1.211 or later

Date, time, impact level, login and login user information are output together on one line.

The login user information varies by the setting of the login user and the setting of Function table Lock when receiving impact.

Output	Login user	Function table Lock
, --,	No login user	0, 1, 2
,00, ADMIN	Administrator	1
,01~10,USER	User	1
, --,GUEST	Guest	2

Output example

2018/05/29,11:08:18,SHOCK LV,3, --,

2018/05/29,11:12:27,SHOCK LV,4,00,ADMIN

2018/05/29,11:13:38,SHOCK LV,3,01,USER

2018/05/29,11:17:04,SHOCK LV,4, -- ,GUEST

6. Response Adjustment / Self Check Function

This function stabilizes the weight value, reducing the influence on weighing that is caused by drafts and/or vibration at the place where the balance is installed. This function adjusts by automatically analyzing the environment or by hand-operation. The function has three stages as follows : Changing the weighing speed changes the display refresh rate.

Display	Function setting	Response characteristic
FAST	Cond 0	Fast response, Sensitive value
MID.	Cond 1	⬆ ⬇
SLOW	Cond 2	Slow response, Stable value

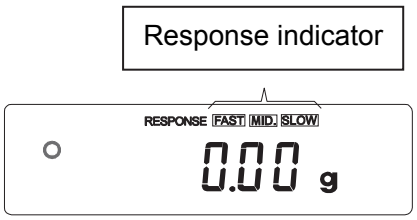

6-1 Response Adjustment

Response adjustment can be changed by the following method.

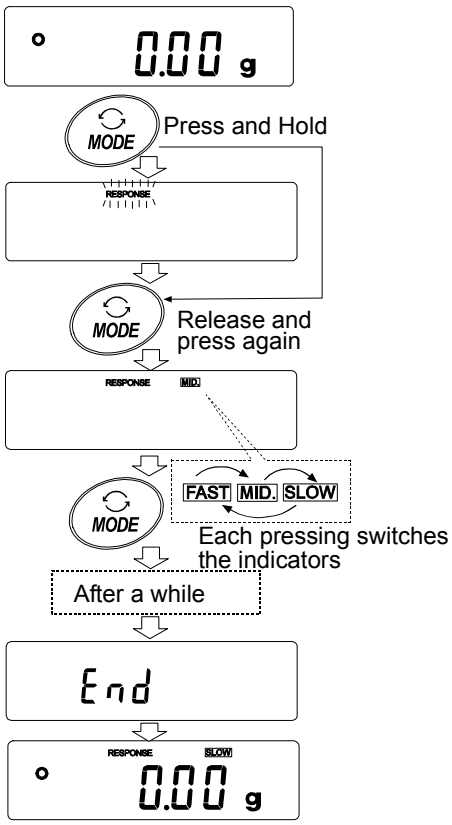

1. Press and hold the [MODE] key for 2 seconds until [RESPONSE] is displayed, and then press the [MODE] key again.
2. Press the [MODE] key to select a weighing speed. Either [FAST], [MID] or [SLOW] can be selected.
3. After a few seconds of inactivity the balance displays [End]. Then, it returns to the weighing mode and displays the updated response indicator. The response indicator remains displayed for a while.

Note

When setting the Response adjustment, "Condition (Cond)" and "Display refresh rate (SPd)" in the Function Table "Environment display (bASFnc)" are changed as below.

Display	Cond (Condition)	SPd (Display refresh rate)	S-tb (Stability band width)
FAST	0	2	2
MID.	1	0	1
SLOW	2	0	1

When using a combination other than the above, please set individually as shown in "9. Function Table".

Note

If [RESPONSE] is displayed and you leave without pressing the [MODE] key, the "Self-check function" is activated. Please refer to "6-2 Self Check Function". For the setting method, refer to "9. Function Table".

6-2 Self Check Function / Automatic Setting Of Minimum Weighing Value By ECL

With the self check function confirmation and display of repeatability can be performed in addition to failure diagnosis, and whether or not the balance's performance is being exhibited can be easily checked. It is also possible to display and register the reference value of the minimum weighing value using repeatability data. For details of the minimum weighing value, refer to the technical information on our website. (https://www.aandd.jp)

6-2-1 For Balance Software Version 1.200 To 1.220

1. Press and hold the MODE key for 2 seconds while weighing is displayed.
2. Release the key when RESPONSE display blinks.
3. CH displays and the self-diagnosis function is started. "ECL" will be displayed in a few seconds. When the MODE key is pressed with CH displayed, the change in weighing value for repeatability due to the electronically controlled load (ECL) is seen. (Applied from balance software version 1.100 or later)
4. When the diagnosis is completed, the diagnosis result is displayed. When there are no problems in the balance, the CH PASS display blinks. If CH FAIL is displayed blinking, there is a possibility that a fatal fault has occurred in the balance. Please request repair.

   SAMPLE key ··· It is possible to switch the display of diagnostic result, repeatability, minimum weighing value.

   PRINT key ··· The displayed contents are output. When repeatability is displayed, Ok is lit up in the catalog specifications. When the catalog specification is exceeded, Err blinks and calls for review of the installation environment. (Applied from balance software version 1.100 or later)
5. Press the CAL key to display End and move to the display for minimum weighing value registration.
6. When registering as minimum weighing value of minimum weight value display warning function performs the following. Press the RE-ZERO key to change No/Go and display Go. Press the PRINT key. If not registered, press the PRINT key while displaying No, or press CAL. Return to the weighing display.

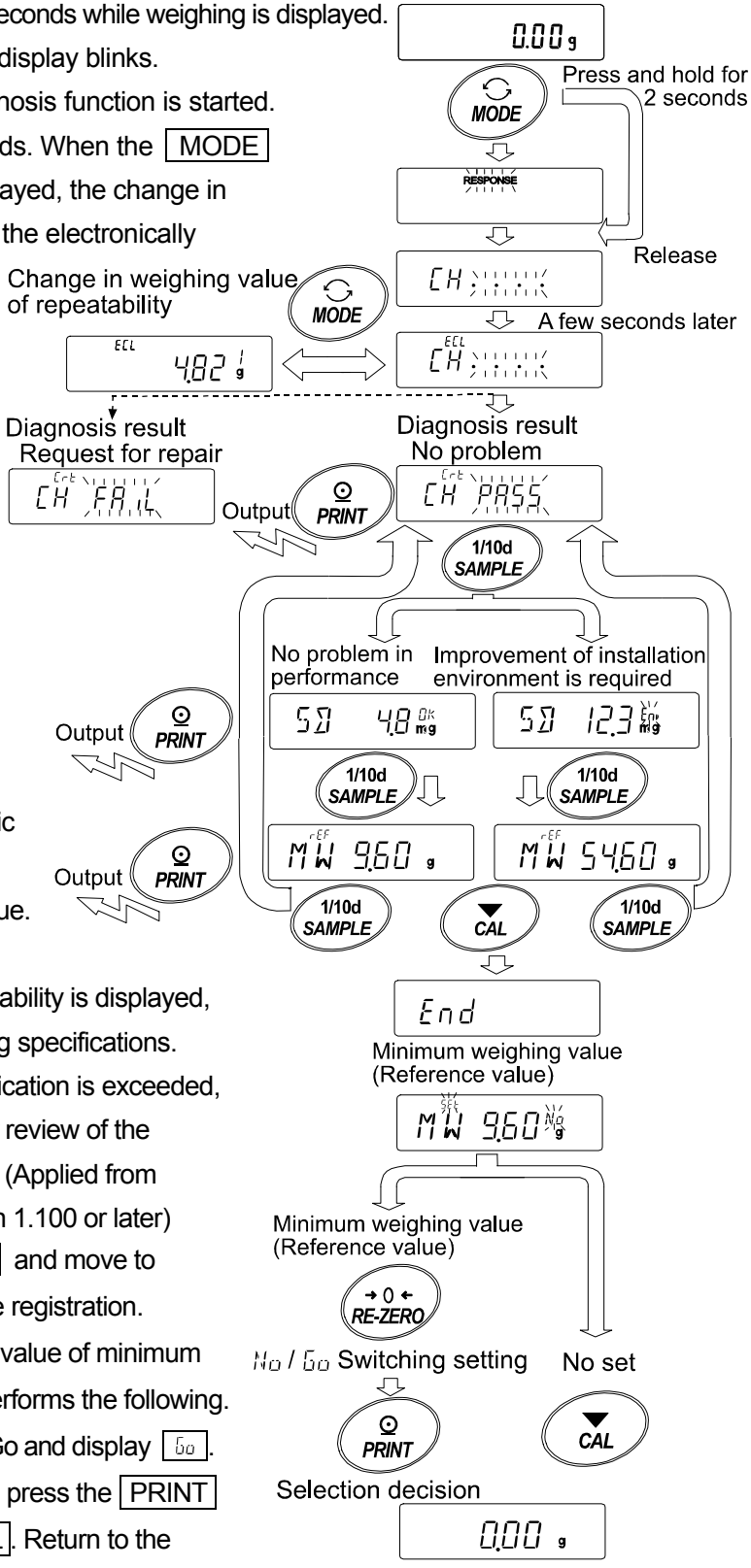

* For minimum weighing warning function, refer to " 15. Minimum Weighting Warning Function".

Note

For the self-check-function, the settings of the balance software versions 1.200 can only be made when logged in as administrator (AdMin) if the password lock function is turned on.

6-2-2 For Balance Software Version 1.300 Or Later

Setting procedure (refer to the "Setting procedure figure" on the next page)

1. Press and hold the [MODE] key for 2 seconds while weighing is displayed.
2. Release the key when [RESPONSE] display blinks.
3. [CH] displays and the self-diagnosis function is started. "ECL" will be displayed in a few seconds.
   When the [MODE] key is pressed with [CH] displayed, the change in weighing value of repeatability due to the electronically controlled load (ECL) is seen.
4. When the diagnosis is completed, the diagnosis result is displayed.
   When there are no problems in the balance, the [CH PASS] display blinks. If [CH FAIL] is displayed blinking, there is a possibility that a fatal fault has occurred in the balance. Please request repair.
   When repeatability is displayed, [OK] is lit up in the catalog specifications. When the catalog specification is exceeded, [Err] blinks to call for review of the installation environment.

   [SAMPLE] key ·· It is possible to switch the display of diagnostic result, repeatability, minimum weighing value.

   [PRINT] key ····· The displayed contents are output.

   [MODE] key ····· Selects the measurement tolerance of the minimum weighing value (reference value).

   With minimum weighing value (reference value) displayed, each operation can be performed with the following keys.

5. Transmitting the data of the minimum weighing value all at one time.
   Press the [PRINT] key for 2 seconds to display [out]. After the data is output, [End] is displayed.
6. Storing the reference value of the minimum weighing value in "15. Minimum Weighing Warning Function"
   Press the [SAMPLE] key for 2 seconds to display [MW SEt] and the reference value of the minimum weighing value is registered. Then, [End] is displayed and the valance returns to weighing mode.
7. When not registering
   Press the [CAL] key. [End] is displayed and the valance returns to weighing mode.
8. Return to the display of the diagnostic result.
   Press the [SAMPLE] key to return to the display of the diagnostic result (step 4).

* For minimum weighing warning function, refer to " 15. Minimum Weighting Warning Function".

Setting procedure figure

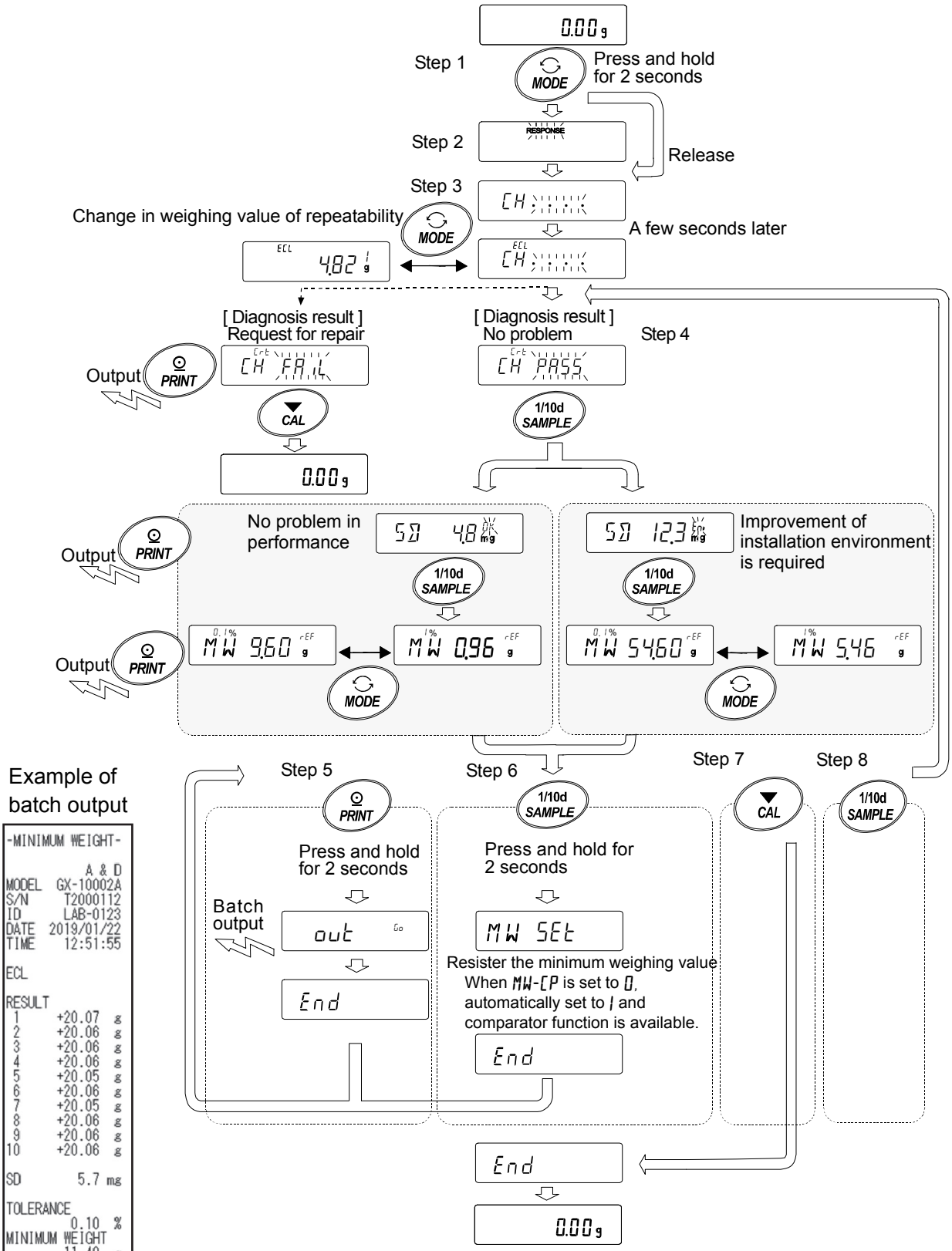

Example of batch output

```
-MINIMUM WEIGHT-

            A & D
MODEL   GX-10002A
S/N      T2000112
ID       LAB-0123
DATE   2019/01/22
TIME     12:51:55

ECL

RESULT
 1      +20.07  g
 2      +20.06  g
 3      +20.06  g
 4      +20.06  g
 5      +20.05  g
 6      +20.06  g
 7      +20.05  g
 8      +20.06  g
 9      +20.06  g
10      +20.06  g

SD         5.7 mg

TOLERANCE
          0.10  %
MINIMUM WEIGHT
         11.40  g


REMARKS


SIGNATURE


----------------
```

7. Calibration

Since the balance's resolution is high, weighing values may change due to gravity and daily environmental changes. It is necessary to perform calibration (sensitivity adjustment) with the weight in order to keep the weighing values from changing even if gravity or the environment changes.

It is recommended that you calibrate if the balance is installed for the first time or relocated, or when the weighing values change significantly in daily inspection, etc.

Adjustment means to adjust the weighing value of the balance using the reference weight or internal mass. Calibration is to weigh with the reference weight and compare how much the result deviates from the reference value. (Adjustment is not performed in calibration.)

Calibration (Sensitivity adjustment)

Auto calibration ·····	Automatically adjust the balance using the internal mass depending on the temperature change of the operating environment or the set time and interval time.（GX-AE / GX-A series）
Calibration using the internal mass·····	Using the internal mass, adjust the balance with a single touch.（GX-AE / GX-A series）
Calibration using an external weight ·····	Using an external mass, adjust the balance with an external mass.

Calibration test（Sensitivity calibration）

Calibration test with an external weight·····	Output the result of checking the accuracy of weighing using your own weight. * No adjustment is made.
Calibration test with an internal mass ·····	Output the result of checking the accuracy of weighing using the internal mass. * No adjustment is made. （GX-AE / GX-A series with 0.0001g type）

Caution

- ☐ Do not allow vibration or drafts to affect the balance during calibration.
- ☐ To output the data for GLP/GMP using the RS-232C interface, set "GLP/GMP output (inFo)" of "Data output (dout)". Refer to "9. Function Table". The time and date can be added to the GLP/GMP report. If the time or date is not correct, adjust them. Refer to "9-7 Clock and Calendar Function".
- ☐ By setting "Data memory (dAtA)" of the function table, the data of calibration (sensitivity adjustment execution record) and calibration test (sensitivity calibration) can be stored in memory.

Caution when using your external weight

- ☐ The accuracy of the weight used in calibration affects the accuracy of the balance after calibration.
- ☐ Select the mass to be used for calibration and calibration tests from the table below.

Model	Usable calibration weight	Factory setting	Adjustable range
GX-124AE, GX-124A, GF-124A	50g, 100g	100g	-0.9999g ~ +0.9999g
GX-224AE, GX-224A, GF-224A	50g, 100g, 200g	200g	
GX-324AE, GX-324A, GF-324A	50g, 100g, 200g, 300g		
GF-123A	50g, 100g	100g	-9.999g ~ +9.999g
GX-203A , GF-203A	50g, 100g, 200g	200g	
GX-303A, GF-303A	50g, 100g ~ 300g (100g interval)	200g	
GX-403A, GF-403A	50g, 100g ~ 400g (100g interval)	400g	
GX-603A, GF-603A	50g, 100g ~ 600g (100g interval)	500g	
GX-1003A, GF-1003A	50g, 100g ~ 1000g (100g interval)	1000g	
GX-1603A, GF-1603A	50g, 100g ~ 1600g (100g interval)	1000g	
GF-1202A	500g, 1000g	1000g	-99.99g ~ +99.99g
GX-2002A, GF-2002A	500g, 1000g, 2000g	2000g	
GX-3002A, GF-3002A	500g, 1000g ~ 3000g (1000g interval)		
GX-4002A, GF-4002A	500g, 1000g ~ 4000g (1000g interval)	4000g	
GX-6002A, GF-6002A	500g, 1000g ~ 6000g (1000g interval)	5000g	
GX-10002A, GF-10002A	500g, 1000g ~ 10000g (1000g interval)	10000g	
GX-6001A, GF-6001A	500g, 1000g ~ 6000g (1000g interval)	5000g	-99.9g ~ +99.9g
GX-10001A, GF-10001A	500g, 1000g ~ 10000g (1000g interval)	10000g	

Display

This indicator means calibration data (sensitivity adjustment and sensitivity calibration) is being imported.
Do not allow vibration or drafts to affect the balance while the indicator is displayed.

7-1 Automatic Calibration (GX-AE/GX-A Series Only)

This function automatically calibrates the balance according to ambient temperature change, setting time and interval time. If GLP output is selected in the function table, the balance outputs the calibration report after the calibration.

- ☐ In the auto calibration mode, either the temperature change ([Fnc 0), the setting time ([Fnc 1), or the interval time ([Fnc 2) can be set with the function setting [Fnc.
- ☐ For the setting time, the three function setting of [tiME 1, [tiME 2 and [tME 3 can be set.
- ☐ Interval time can be set from 0.5h to 24h with function setting [int.

Caution

If something is on the weighing pan, the balance judges that it is in use and does not perform automatic self calibration.

The criteria that the balance judges in use are as follows.

0.0001g models	0.001g models	0.01g models	0.1g models
Lower than 0.5g	Lower than 2g	Lower than 20g	Lower than 20g

To maintain the accurate calibrated state, keep the weighing pan clear while not in use.

This mark blinking (◄) indicates that the automatic self calibration will start. If the balance is not in use, after blinking for a while, the balance will start automatic self calibration using the internal mass. The blinking duration depends on the environment.

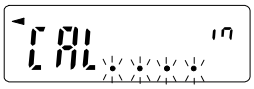

This indicates that the balance is importing calibration data. Do not allow vibration or drafts to affect the balance while this indicator is displayed. After calibration, the balance returns to indicate the previous display.

Note The balance can be used while the indicator blinks. But, it is recommended that to maintain the accuracy, stop using the balance and confirm that there is nothing on the pan and allow the balance to perform self calibration.
Depending on the setting of "8. Function Switch And Initialization", "Change prohibited" or "Changeable (usable)" can be selected.

7-2 One-Touch Calibration (GX-AE/GX-A Series Only)

This function calibrates the balance using the internal mass.

1. Connect the AC adapter and warm up the balance for at least 30 minutes with nothing on the weighing pan.
2. Press the [CAL] key. The balance displays [CAL in] .
3. The balance performs calibration using the internal mass. Do not allow vibration or drafts to affect the balance.
4. After the calibration, If the "GLP output (inFo)" parameter of the function table is set, the balance outputs a sensitivity adjustment execution record.
5. The balance will automatically return to weighing mode after calibration.

About the internal mass

The value of the internal mass may change due to factors such as the operating environment and aging. Correct the internal mass value as necessary. Refer to "7-7 Correcting The Internal Mass Value Of The GX-AE/GX-A Series", "7-7-1 Correcting The Internal Mass Value Of The GX-AE/GX-A Series (Auto)", "7-7-2 Correcting The Internal Mass Value Of The GX-AE/GX-A Series (Manual).

Since the internal mass is about 200g, the possibility of error may increase as the weighing value increases.

To maintain the weighing accuracy, perform the calibration using an external weight periodically, as described below "7-4 Calibration Using An External Weight".

7-3 Calibration Test Using An Internal Mass (GX-AE/GX-A Series 0.0001g Models Only)

This function tests the weighing accuracy using an internal mass. (The result is output, but the sensitivity adjustment is not performed.)

Only high-precision analysis balances (0.0001g) can perform calibration test.

1. Connect the AC adapter and warm up the balance for at least one hour with nothing on the weighing pan.
2. Press and hold the CAL key for 2 seconds until CAL in is displayed.
3. The zero point is checked. Do not apply vibration.
4. The zero point checked is displayed.
5. Full scaling is checked. Do not apply vibration.
6. The full scaling checked is displayed. The reference values of each balance type are following. When the full scale display is within the measurement tolerance, it means that the sensitivity adjustment was performed correctly with the internal mass.

Type	Reference value of full scaling	Measurement tolerance
GX-124AE	100.0000g	±0.2mg
GX-124A		
GX-224AE	200.0000g	
GX-224A		
GX-324AE		
GX-324A		

7. When the output is set to GLP/GMP report (InFo 1 or 2), the calibration test result is output.
8. The valance automatically returns to weighing mode.

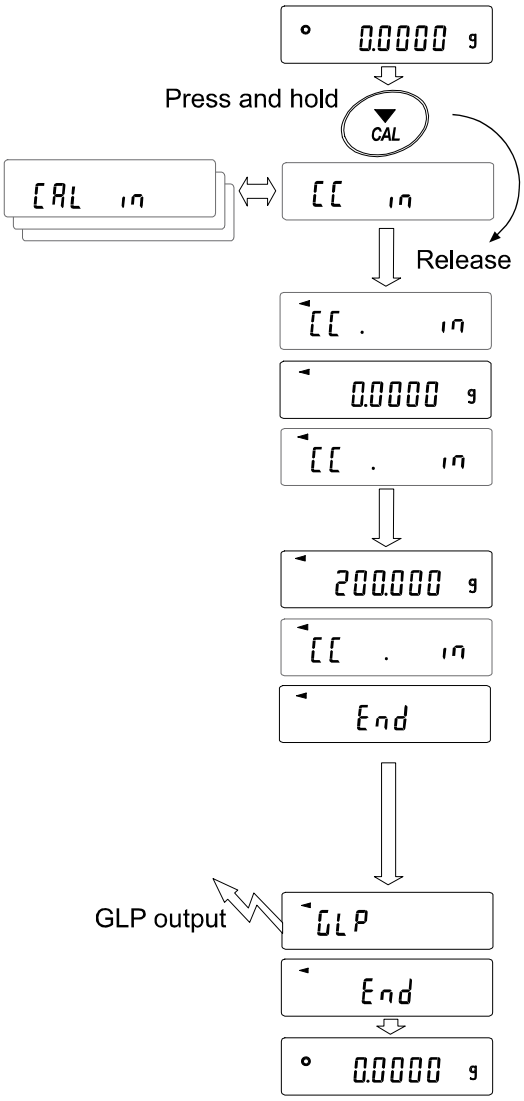

7-4 Calibration Using An External Weight

This function calibrates the balance using an external weight.

1. Connect the AC adapter and warm up the balance for at least 30 minutes with nothing on the weighing pan.
2. Press and hold the CAL key for 2 seconds until CAL out is displayed, then release the key.
3. Make sure that nothing is on the weighing pan and press the PRINT key to weigh the zero point.
   Do not apply vibration, etc.
4. Place the external weight on the weighing pan and press the PRINT key. Do not apply vibration etc.
5. Remove the external weight from the weighing pan.
6. After calibration, if GLP output is set, "sensitivity adjustment execution record" is output or stored in data memory.
7. The display automatically returns to weighing display.
8. Place the external weight again and check that the set value is ± 2 digits.
   If it is out of range, pay attention to the surrounding environment and start from "1".

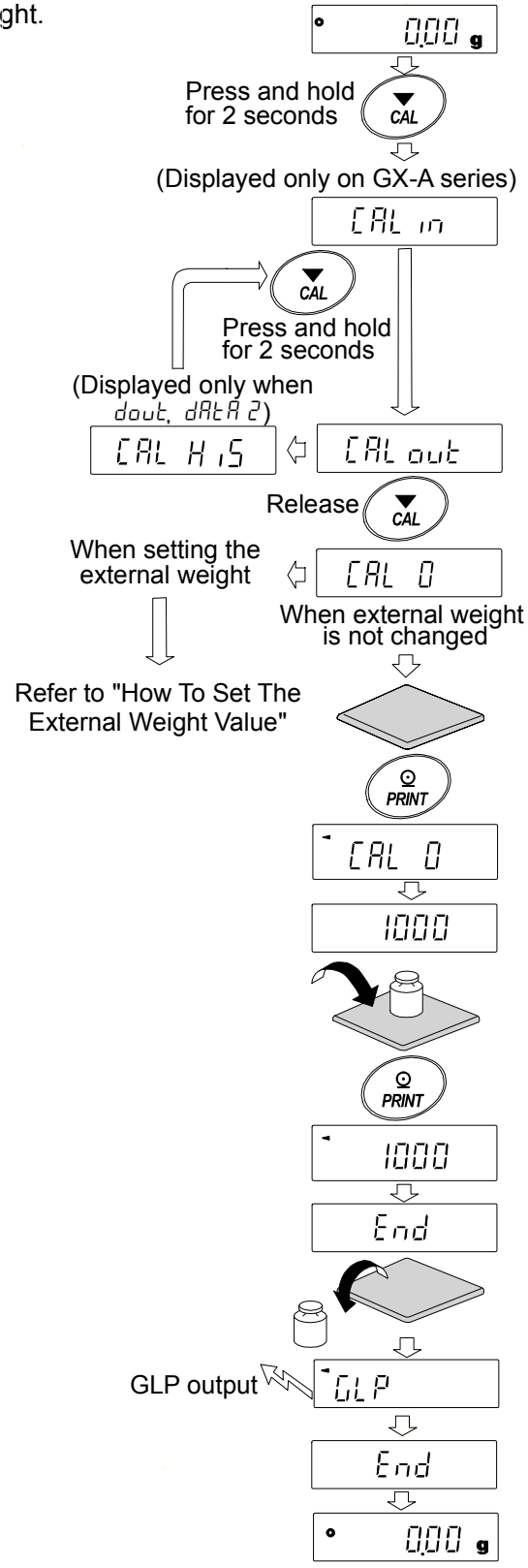

7-5 Calibration Test Using An External Weight

This function tests the weighing accuracy using an external weight and outputs the result. This is available only when the GLP/GMP output parameter is set to (doUt inFo1). (Calibration test does not perform calibration)

1. Connect the AC adapter and warm up the balance for at least 30 minutes with nothing on the weighing pan.
2. Press and hold the [CAL] key for 2 seconds until [CC out] is displayed and release the key.
3. Make sure that nothing is on the weighing pan and press the [PRINT] key and weigh the zero point.
   Do not apply vibration etc.
4. The weighing value of zero point is displayed for several seconds. Place the external weight on the weighing pan and press the [PRINT] key. Weigh the external weight.
   Do not apply vibration, etc.
5. Weighing value of the external weight is displayed for several seconds.
6. Remove the external weight from the weighing pan.
7. The sensitivity calibration status is output or stored in the data memory.
8. It automatically returns to the weighing display.

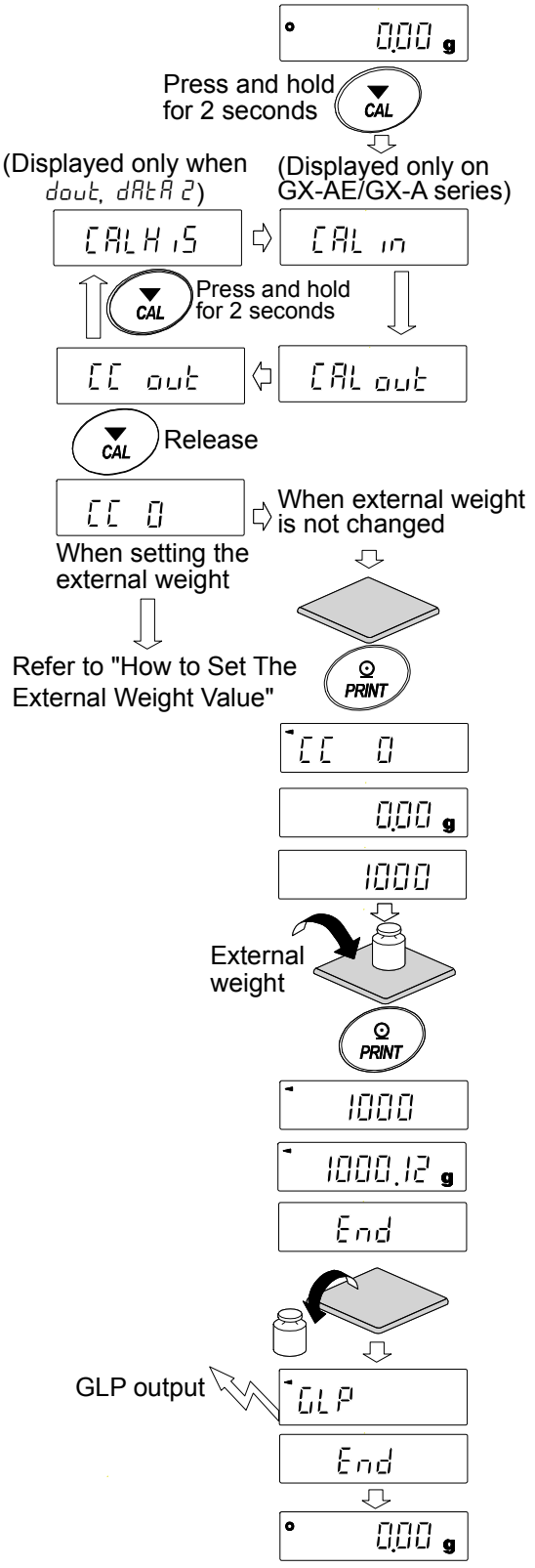

7-6 How To Set The External Weight Value

When calibrating the balance or performing a calibration test, the external weight you have on hand can be set. (Refer to "Usable calibration weight" on Page 36.)

After [CAL 0] is displayed the external weight value can be set as shown in "7-4 Calibration Using An External weight". Or, after [CC 0] is displayed, the external weight value can be set as shown in "7-5 Calibration Test Using An External Weight".

1. From calibration [CAL 0] or calibration test [CC 0] display, press the [SAMPLE] key.
2. Using the [RE-ZERO] key, select the calibration weight (refer to page 36) while all digits are blinking.
3. Specify the calibration weight value by the following keys.

[SAMPLE] key····· Switches the display condition to "All digits blinking" (calibration weight selection mode) or "The last four digits blinking" (value adjustment mode).

[RE-ZERO] key ··· (+) In the adjustment range setting, the value becomes +9999 digits after -9999 digits.

[MODE] key····· (−) In the adjustment range setting, the value becomes -9999 digits after +9999 digits.

[PRINT] key····· Registers the changed external weight value. Registered values are stored even when the power is turned off.

[CAL] key Suspends setting. (Returns to [CAL 0] or [CC 0].)

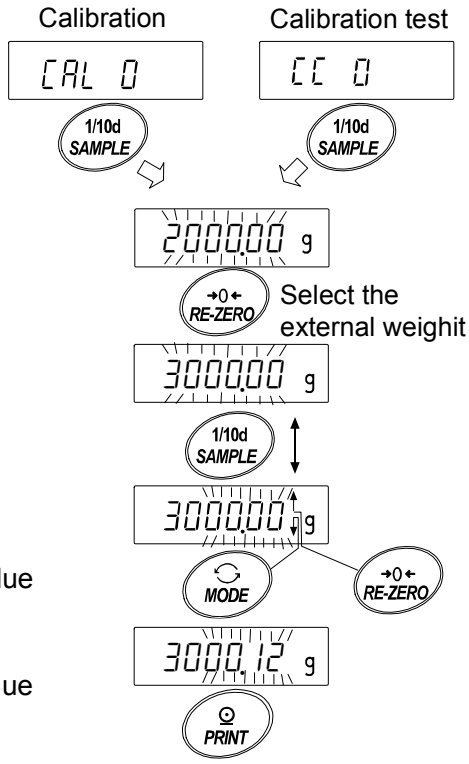

Ex:
Updated the external weight 3000.12g

7-7 Correcting The Internal Mass Value Of The GX-AE/GX-A Series

Internal mass value can be corrected with function setting [5 in.

There are two correction methods, as follows.

Auto····· This is a method of correcting the internal mass weight value based on an external weight.
Manual···· This is a method of correcting by digitally inputting a correction reference value (internal weight conversion value).

Note

☐ Correction of internal mass value can not be executed at factory setting.
Refer to "8. Function Switch And Initialization" or the following setting method, and enable changing of the function setting and correction the internal mass value.

Setting procedure

1. Press the [ON:OFF] key to turn off the display.
2. Hold down the [PRINT] and [SAMPLE] keys, and press the [ON:OFF] key to display [P5] .
3. Press the [PRINT] key and set the "internal mass correction switch" and "function setting switch" to " 1 " with the next key.

   [SAMPLE] key····· Select the switch (blinking digit).

   [RE-ZERO] key ····· Change the value of the blinking switch.

   A-1xxx1 ← Internal setting switch (Factory setting 1)
   Internal mass correcting switch (Factory setting 0)
4. Press the [PRINT] key to register and display the weighing display.

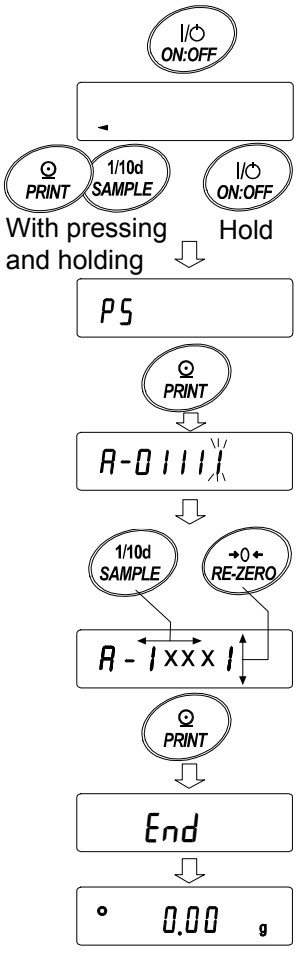

7-7-1 Correcting The Internal Mass Value Of The GX-AE/GX-A Series (Auto)

Calibrate referring to "7-4 Calibration Using An External Weight".
This is method of correcting the internal mass weight value based on an external weight.
After calibration with the external mass, the balance automatically loads and unloads the internal mass and corrects the internal mass value.
The corrected mass value is maintained in non-volatile memory even if the AC adapter is removed.

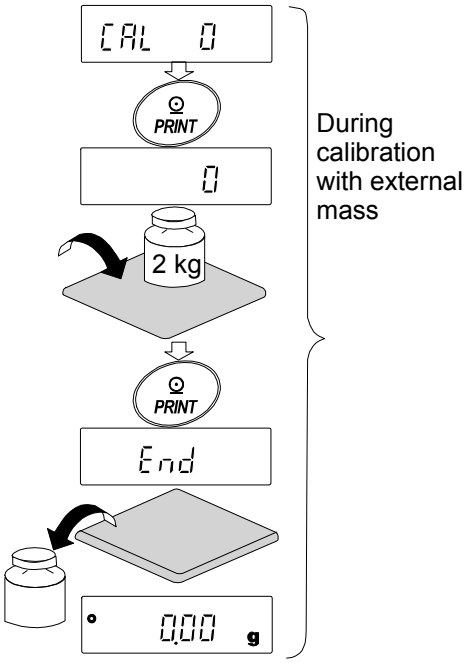

Setting procedure

The internal mass value cannot be corrected at factory settings.
Refer to the Setting procedure in "7-7 Correcting The Internal Mass Value Of The GX-AE/GX-A Series" and enable changing of the function setting and correction the internal mass value.

1. In weighing mode, press and hold the [SAMPLE] key for 2 seconds to display [bASFnc].
2. Press the [SAMPLE] key several times until [CS in] appears.
3. Press the [PRINT] key to display [Auto].
4. When preparation is completed, press the [PRINT] key. [CAL. SET] is displayed and the internal mass value is automatically corrected.
5. When adjustment of the internal mass value is completed, [CAL. in] is displayed and calibration is performed automatically with the adjusted internal weight.
6. When calibration is completed, [MANUAL] is displayed.
7. Press the [CAL] key twice to return to weighing mode.
8. Make sure that the balance was corrected using the external weight for correcting. If it is not corrected properly, return to "1". (Be aware of vibration during correcting)

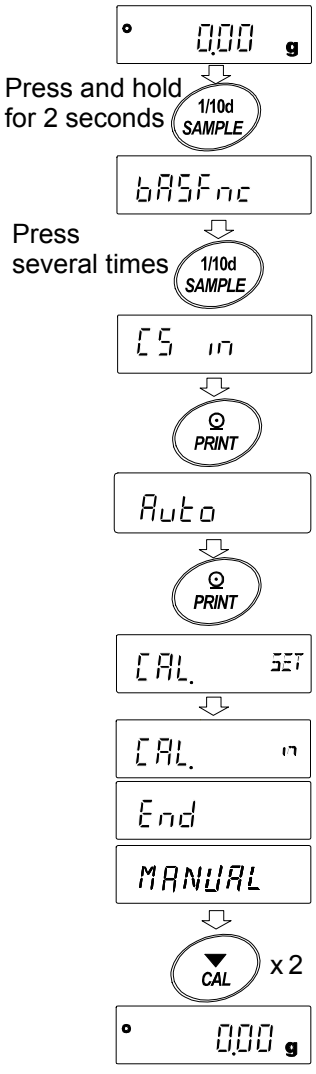

7-7-2 Correcting The Internal Mass Value Of The GX-AE/GX-A Series (Manual)

The balance can correct the internal mass value within the range shown below. This function corrects the internal mass value to conform to an external weight. The corrected mass value is maintained in non-volatile memory even if the AC adapter is removed. The internal mass value is corrected as follows:

Model	Target	Range	Model	Target	Range
GX-124AE	100.000g	±0.9999g	GX-203A	200.000g	±9.999g
GX-124A			GX-303A		
GX-224AE	200.0000g		GX-403A		
GX-224A			GX-603A	500.000g	
GX-324AE			GX-1003A	1000.000g	
GX-324A			GX-1603A		
			GX-2002A	2000.00g	±99.99g
			GX-3002A		
			GX-4002A		
			GX-6002A	5000.00g	
			GX-10002A		
			GX-6001A	5000.0g	±99.9g
			GX-10001A		

Example: GX-6002A

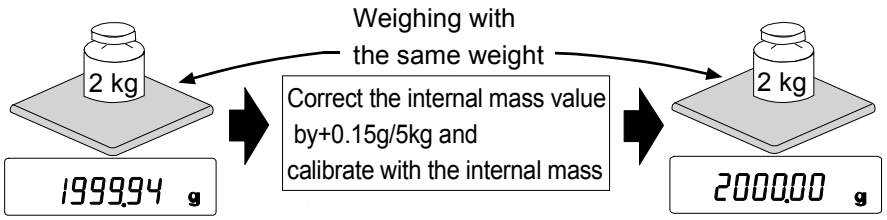

After performing one touch calibration, place the external weight on the balance and check the correction amount.
(In the example, since there is deviation of -0.06g at 2000g, the correction amount for the GX-6002A is +0.15g/5kg because the correction target is 5000g)

Setting procedure

The internal mass can not be set by factory setting. Refer to "7-7 Correcting The Internal Mass Value Of The GX-AE/GX-A Series" to make it possible to change the internal setting and correct the internal mass value.

1. Press and hold the [SAMPLE] key for 2 seconds to display [bASFnc].
   (Enter the function setting)
2. Press the [SAMPLE] key several times until [CS in] appears.
3. Press the [PRINT] key to display [Auto].
4. Press the [SAMPLE] key to display [MANUAL] and press the [PRINT].
   Select the following keys.
   [RE-ZERO] key(＋)·····Select the correction value.
   （After ＋9999 digits will be －9999 digits.）
   [MODE] key(－)·····Select the correction value.
   （After －9999 digits will be ＋9999 digits.）
   [PRINT] key ·····Register and display the following items.
   [CAL] key·····Cancel and display the following items.
5. Press the [CAL] key twice, to return to the weighing display.
6. Press the [CAL] key and calibrate with the internal mass.
7. Place the external weight on the balance check whether the value was corrected properly. If it is not corrected properly, return to "1". (Be aware of vibration during correcting)

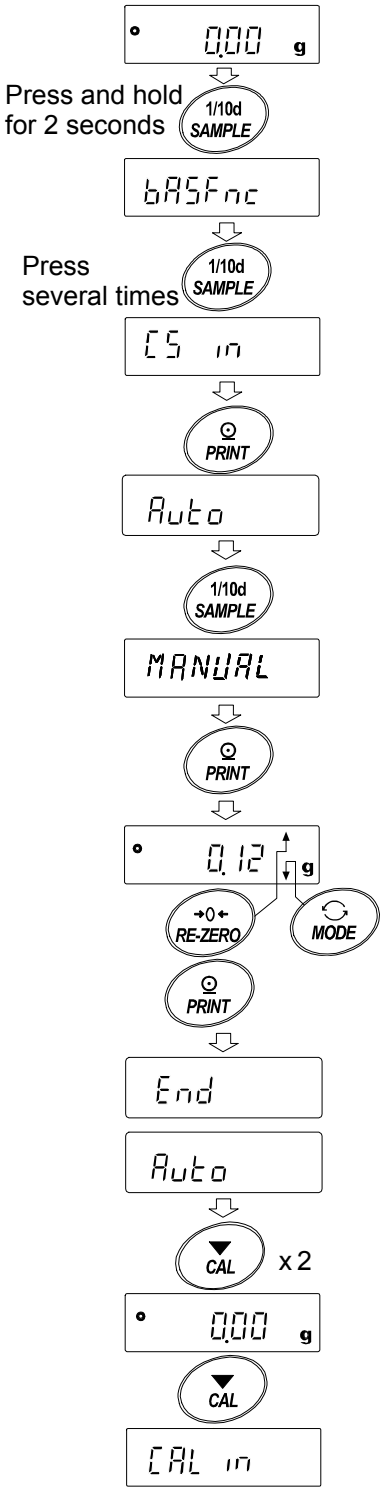

8.Function Switch And Initialization

8-1 Permit Or Inhibit

The balance stores parameters that must not be changed unintentionally adjustment data for accurately weighing, data for adapting to the usage environment, data to control the communications interface, etc. "A function selection switch" is provided to protect those parameters and it can be used to select "Change prohibited" or "Changeable (usable)". By setting to "change prohibited", that function cannot be entered, so inadvertent change.

"Switch for function selection" has the following five.

"Function table", "Calibration using the internal mass", "Calibration using the external weight", "Automatic self calibration", "Internal mass correction".

1. Press the [ON:OFF] key to turn off the display.
2. While pressing and holding the [PRINT] key and the [SAMPLE] key, press the [ON:OFF] key to display [PS].
3. Press the [PRINT] key. Then the balance displays the function switches.

   [SAMPLE] key····· To select a switch to change the parameter. The selected switch blinks.

   [RE-ZERO] key ····· To change the parameter of the switch selected.

   0 Change prohibited

   1 Changeable (usable)

   [PRINT] key ····· To store the new parameter and return to the weighing mode.

   [CAL] key ····· To cancel the operation (display [CLr]) . Press the [CAL] key and return to the weighing mode

Example of GX-AE/GX-A series

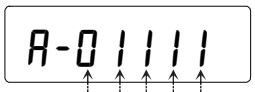

The display shown left indicates the factory settings.

Function table

0 To inhibit changes to the function table.
1 To permit changes to the function table.

Calibration using the internal mass (One-touch calibration)

For balance software version 1.00 to 1.200

0 To inhibit calibration using the internal mass.
1 To permit calibration using the internal mass.

For balance software version 1.211 or later

0 Lock 0 To inhibit calibration using the internal mass.
Lock 1,2 To inhibit calibration using the internal mass when logged in as a user (USER 01 to 10) or a guest (GUEST). *1
1 To permit calibration using the internal mass.

Calibration using an external weight

For balance software version 1.00 to 1.200

0 To inhibit calibration using an external weight.
1 To permit calibration using an external weight.

For balance software version 1.211 or later

Lock 0 To inhibit calibration using an external weight.
Lock 1,2 To inhibit calibration using an external weight when logged in as a user (USER 01 to 10) or a guest (GUEST). *1

Automatic self calibration (Calibration due to changes in temperature)

0 To inhibit automatic self calibration.
1 To permit automatic self calibration.

Internal mass correction

0 To inhibit correction
1 To permit correction

*1 This is available when logged in as an administrater (ADMIN).

Example of GF-A series

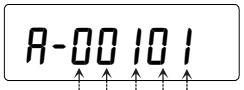

The display shown left indicates the factory settings.

Function table
- 0 To inhibit changes to the function table.
- 1 To permit changes to the function table.

No function

Calibration using an external weight

For balance software version 1.00 to 1.200
- 0 To inhibit calibration using an external weight.
- 1 To permit calibration using an external weight.

For balance software version 1.211 or later
- 0 Lock 0 To inhibit calibration using an external weight.
- Lock 1,2 To inhibit calibration using an external weight when logged in as a user (USER 01 to 10) or a guest (GUEST). *1

No function

No function

*1 This is available when logged in as an administrater (ADMIN).

8-2 Initializing The Balance

This function returns the following parameters to factory settings. Calibration data

- ☐ Calibration data
- ☐ Function table

  The sample unit mass value (counting mode),

  100% reference mass value (percent mode)
- ☐ The data that is stored in the balance using the data memory function
- ☐ External calibration weight and target weight value
- ☐ Function switch settings

Note Be sure to calibrate the balance (adjust sensitivity) after initialization.

Setting procedure

1. Press the [ON:OFF] key to turn off the display.
2. While pressing and holding the [PRINT] key and the [SAMPLE] key, press the [ON:OFF] key to display [PS].
3. Press the [SAMPLE] key to display [CLr].
4. Press the [PRINT] key.

   To cancel this operation, press the [CAL] key.
5. Press the [RE-ZERO] key to change [No / Go].
6. With displaying [CLr Go], press the [PRINT] key to initialize the balance. The balance will automatically return to the weighing mode.

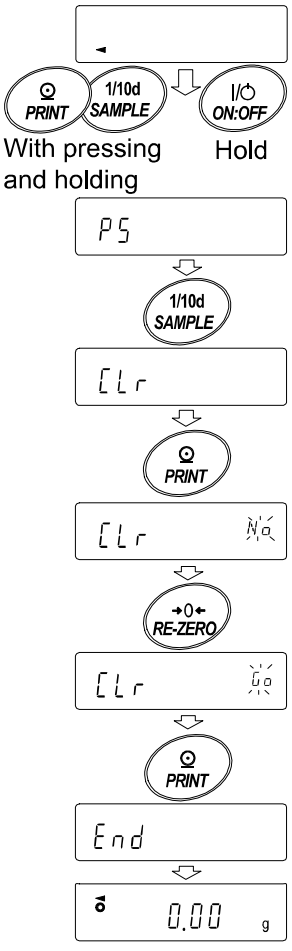

9. Function Table

The function table reads or rewrites the parameters that are stored in the balance. These parameters are maintained in non-volatile memory, even if the AC adapter is removed.
The function table menu consists of two layers. The first layer is the "Class" and the second layer is the "Item".

9-1 Setting The Function Table

Display symbol and keys

o	The symbol "o" shows effective parameter.
	When pressing and holding the key for 2 seconds in the weighing mode, the balance enters the function table mode. The key to select the class or item in the function table mode.
	The key to change the parameter.
	The key to change the parameter.
	When a class is displayed, moves to an item in the class. When an item is displayed, stores the new parameter and displays the next class.
	When an item is displayed, cancels the new parameter and displays the next class. When a class is displayed, exits the function table mode and returns to the weighing mode.

Setting procedure

1. Press and hold the [SAMPLE] key for 2 seconds until [bASFnc] of the function table is displayed in the weighing mode, then release the key.
2. Press the [SAMPLE] key to select a class.
3. Press the [PRINT] key to enter the class.
4. Press the [RE-ZERO] key to select a parameter for the selected item.
5. Press the [SAMPLE] key to select an item.
6. To change another (multiple) item with the same class, repeat "4" and "5". To end the setting change of the same class, proceed to "7".
7. If storing parameters of the selected class, press the [PRINT] key.
   Then the next class is displayed.
   If canceling the current operation, press the [CAL] key. Then the next class is displayed.
8. When specifying parameters for another class, proceed to "2".
   When finishing the setting, press the [CAL] key to return to weighing mode.

Setting Example

This example sets "Stores weighing data (dAtA 2)" for "Data memory (dAtA)" and "1 minute (int 5)" for "Interval time (int)".

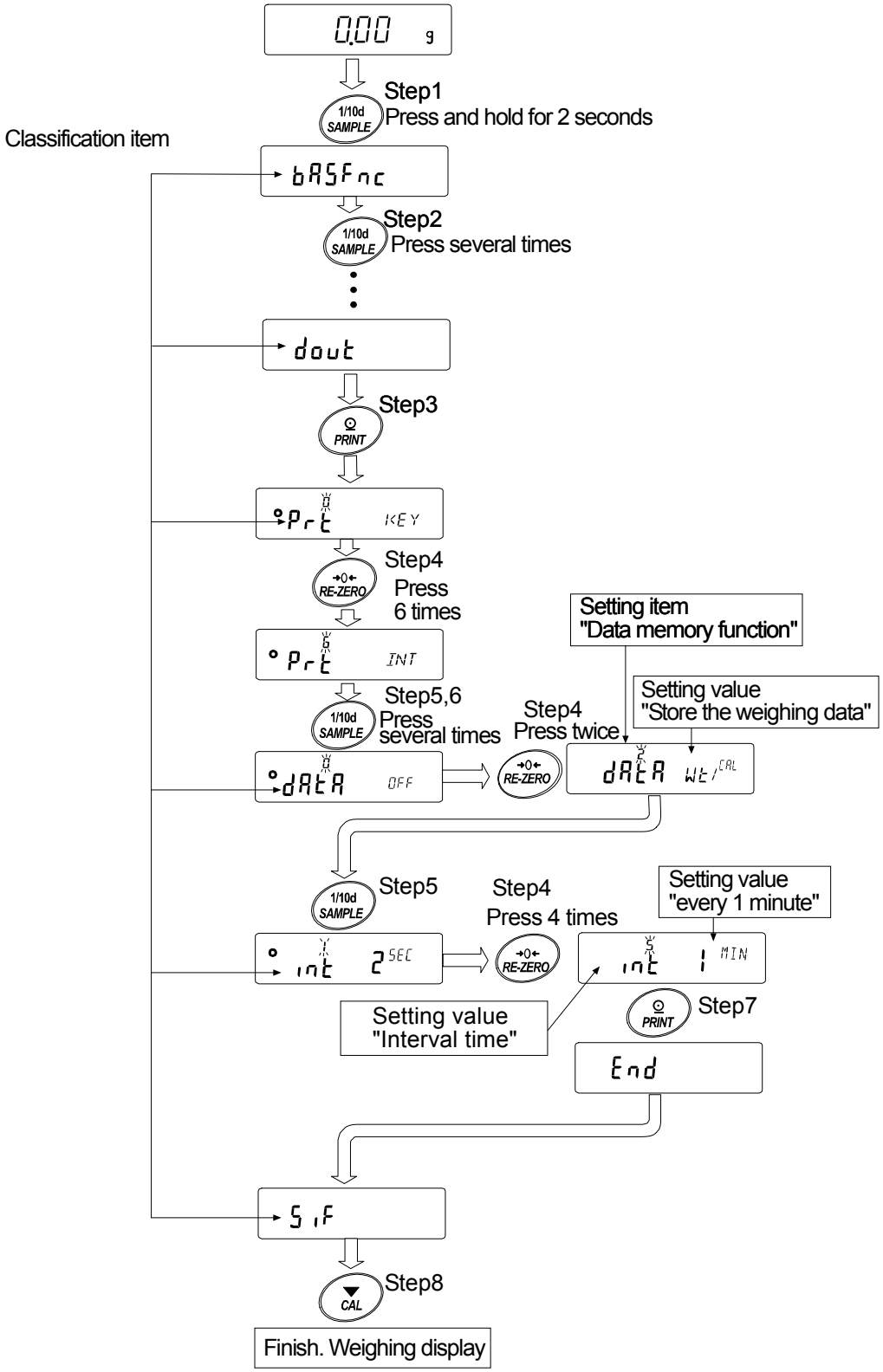

9-2 Details Of The Function Table

Class	Item	Parameter	Description	
bASFnc [00] Environment Display	Cond Condition	0	Fast response, sensitive value	Can be changed by response adjustment. With "HoLd 1", sets the averaging time.
		■ 1		
		2	Slow response, stable value	
	St-b Stability band width	0	Stable when within ± 1 digit	The stabilization indicator illuminates with the display fluctuation within the range. With "HoLd 1" , sets the stabilization range.
		■ 1		
		2	Stable when within ± 3 digit	
	HoLd Hold function	■ 0	OFF	Holds the display when stable in animal mode. With "Hold 1", ANIMAL turns on.
		1	ON	
	trc Zero tracking	0	OFF	Keeps zero display by tracking zero drift.
		■ 1	Normal	
		2	Strong	
		3	Very strong	
	SPd Display refresh rate	■ 0	5 times / second	Output frequency approx.5.21Hz
		1	10 times / second	Output frequency approx.10.42Hz
		2	20 times / second	Output frequency approx. 20.83hz
	Pnt Decimal point	■ 0	Point (.)	Decimal point format
		1	Comma (,)	
	P-on Auto display-ON	■ 0	OFF	Turns on the weighingmode display when AC adapter is connected
		1	ON	
	P-oFF Auto display-OFF	■ 0	OFF	Turns off the display after 10 minutes of inacticity.
		1	ON	
	rnG Readability	■ 0	Display readability	Display at weighing start
		1	Not display readability	
	bEEP Buzzer	0	OFF	Buzzer sound such as key operation
		■ 1	ON	
	P-ZEro Stores tare value	■ 0	OFF Zero indication at power on	
		1	ON Previous time weighing indication at power on	
	diSP-LEd Backlight brightness	0~9	10%~100%	
		■ 5	Factory setting 60%	
	LV-LEd Bubble spirit level lightning	0	OFF	Bubble spirit level LED lightning
		■ 1	ON	
	iSd Impact shock detection	0	OFF	Impact detection function (Valid for balance software version 1.300 or later)
		■ 1	ON	
CL AdJ [01] Clock		See "9-7 Clock And Calendar Function"		Confirms and sets the time and date. The time and date are added to output data.

■ Factory setting

Note: "Digit" is a unit of readability.

☐ The number in [ ] is a class number. The numbers are shown as identifier when batching function settings together. Refer to "9-10 Output The Function Settings".

Class	Item	Parameter	Description	
[02] CP Fnc Comparator	CP Comparator mode	■ 0	No comparison	
		1	Comparison when stable value or overloaded	
		2	Continuous comparison	
	CP-t Number of comparator stages	■ 0	3 stage comparator	HI, OK, LO
		1	5 stage comparator	HH, HI, OK, LO, LL
	CP-Z Near zero	0	Also compare near zero	
		1	± 5 are not compared	
		■ 2	± 10 are not compared	
		3	± 20 are not compared	
		4	± 50 are not compared	
		5	± 100 are not compared	
	CP-P Polarity	0	Plus only	
		1	Minus only	
		■ 2	Bipolarity	
	CP in Input method	■ 0	Digital input, upper / lower limits	CP HH, CP Hi, CP Lo CP LL can be selected.
		1	Weighing input, upper / lower limits	
		2	Digital input, reference value	CP rEF, CP LMt CPLMt2 can be selected.
		3	Weighing input, reference value	
	CP-Frd Flow measurement	■ 0	Comparison by flow rate value	
		1	Comparison by weighing value (g)	
[03] CP VALUE Comparator value	CP HH Second upper limit	See "9-8 Comparator Function"		Displayed only when CP in 0, 1 is set to digital input. CP HH, CP LL are displayed only when 5step comparator is set.
	CP Hi Upper limit			
	CP Lo Lower limit			
	CP LL Second lower limit			
	CP rEF Reference value	See "9-8 Comparator Function"		Displayed only when CP in 2, 3 is set by input by load. CP LMt2 is displayed only when 5 step comparator is set.
	CP LMt Tolerance value			
	CP LMt2 Second tolerance value			

■ Factory setting

Note: "Digit" is a unit of readability.

☐ The number in [ ] is a class number. The numbers are shown as identifier when batching function settings together. Refer to "9-10 Output The Function Settings".

Class	Item	Parameter	Description	
[04] CP bEEP Comparator buzzer	bEP HH HH buzzer	■ 0	OFF	Displayed only when 5 step comparator is set.
		1	ON	
	bEP Hi HI buzzer	■ 0	OFF	
		1	ON	
	bEP oK OK buzzer	■ 0	OFF	
		1	ON	
	bEP Lo LO buzzer	■ 0	OFF	
		1	ON	
	bEP LL LL buzzer	■ 0	OFF	Displayed only when 5 step comparator is set.
		1	ON	
[05] dout Data output	PrT Data output mode *1	■ 0	Key mode	Accepts the PRINT key only when the display is stable.
		1	Auto print mode A (Reference=zero)	Outputs data when the weighing value stabilizes beyond the range form AP-P to AP-b from the zero point.
		2	Auto print mode B (Reference=last stable value)	Outputs data when the weighing value stabilizes beyond the range from AP-P to AP-b from last stable value.
		3	Stream mode	Outputs data at the specified display refresh rate.
		4	Key mode B (Immediately)	Accepts the PRINT key regardless of the display condition.
		5	Key mode C (When stable)	Accepts the PRINT key immediately when the display is stable, or waits for the display to be stable when not.
		6	Interval output mode	Outputs data for each time set by int .
	AP-P Auto print polarity	■ 0	Plus only	Displayed value > Reference
		1	Minus only	Displayed value < Reference
		2	Bipolarity	Regardless of displayed value
	AP-b Auto print difference	■ 0	10 digit	Difference between reference value and displayed value
		1	100 digit	
		2	1000 digit	

■ Factory setting

Note: "Digit" is a unit of readability.

☐ The number in [ ] is a class number. The numbers are shown as identifier when batching function settings together. Refer to "9-10 Output The Function Settings".

*1 download "Communication manual" from our website (https://www.aandd.jp) and refer to it.

Class	Item	Parameter	Description	
[05] dout Data output mode	dAtA Data memory	■ 0	OFF	Refer to "11. Data Memory"
		1	Stores unit mass in counting mode	
		2	Stores the weighing data and calibration history	
	int Interval time	0	Every measurement	Interval time in the interval memory mode when using PrtG.
		■ 1	2 seconds	
		2	5 seconds	
		3	10 seconds	
		4	30 seconds	
		5	1 minutes	
		6	2 minutes	
		7	5 minutes	
		8	10 minutes	
	d-no Data number	■ 0	No output	Valid when data memory function is ON.
		1	Output	
	S-td Time/Date output	■ 0	No output	Refer to "9-7 Clock And Calendar Function"
		1	Time only	
		2	Date only	
		3	Time and date	
	S-id ID number output	■ 0	No output ID number	
		1	Output ID number	
	PUSE Data output pause	■ 0	OFF	Selects the data output interval.
		1	ON open 1.6 seconds	
	At-F Auto feed	■ 0	OFF	Selects whether or not automatic feed is performed.
		1	ON open 1 line	
	inFo GLP output	■ 0	OFF	Refer to "10-3 GLP Report"
		1	ON	
		2	ON (output clock of external)	
	Ar-d Zero after output	■ 0	OFF	Function to apply re-zero after outputting data.
		1	ON	
	UFC *1 UFC function	■ 0	OFF	Refer to ,"Communication manual" on the A&D website.
		1	ON	

■ Factory setting

Note: "Digit" is a unit of readability.

☐ The number in [ ] is a class number. The numbers are shown as identifier when batching function settings together. Refer to "9-10 Output The Function Settings".

*1 download "Communication manual" from our website (https://www.aandd.jp) and refer to it.

Class	Item	Parameter	Description	
[06] SIF Serial interface *1	ModE Access point	■ 0	PC	All communication setting are possible.
		1	Printer	Only tYPE 0,1 can be selected.
		2	External indicator	Selects stream with tYPE 0
	bPS Baud rate	0	600bps	
		1	1200bps	
		■ 2	2400bps	
		3	4800bps	
		4	9600bps	
		5	19200bps	
		6	38400bps	
	btPr Data bit, parity bit	■ 0	7 bit EVEN	
		1	7 bit ODD	
		2	8 bit NONE	
	CrLF Terminator	■ 0	CR LF	CR: ASCII 0Dh code LF : ASCII 0Ah code
		1	CR	
	tYPE Data format	■ 0	A&D standard format	Refer to "communication manual " on the A&D website.
		1	DP format	
		2	KF format	
		3	MT format	
		4	NU format	
		5	CSV format	
	t-OP Command time out	0	No limited	Selects wait time during command reception
		■ 1	Limited for one second	
	ErCd AK, error code	■ 0	OFF	AK: ASCII 06h code
		1	ON	
[07] USb USB interface *1	UFnc USB Function mode	■ 0	Quick USB	Parameter will depend on the software version. Refer to "communication manual " on the A&D website.
		1	Bidirectional USB virtual COM	
	U-tP USB data format	■ 0	A&D standard format	
		1	NU format	
		2	CSV format	
		3	TAB format	
		4	NU2 format	

■ Factory setting

Note: "Digit" is a unit of readability.

☐ The number in [ ] is a class number. The numbers are shown as identifier when batching function settings together. Refer to "9-10 Output The Function Settings".

*1 download "Communication manual" from our website (https://www.aandd.jp) and refer to it.

Class	Item	Parameter	Description	
[10] AP Fnc Application function	APF Application mode	■ 0	Normal weighing mode	Refer to "9-9 Description Of Application"
		1	Capacity indicator	
		2	Statistical calculation mode	
		3	Flow measurement mode	
		4	Gross, Net, Tare mode	
	StAF Statistical function mode output items	■ 0	Number of data, sum	
		1	Number of data,sum,max,min,range(max-min),average	
		2	Number of data,sum,max,min,range(max-min),average, standard deviation,coefficient of variation	
		3	Number of data,sum,max,min,range(max-min),average, standard deviation,coefficient of variation,relative error	
	Frd Unit Flow rate unit	■ 0	g / s（gram/second）	Refer to "13. Flow Measurement"
		1	g / m （gram/minute）	
		2	g / h （gram/hour）	
		3	mL / s （milliliter/second）	
		4	mL / m （milliliter/minute）	
		5	mL / h （milliliter/hour）	
	Ct AUto Calculation time automatic setting	■ 0	OFF	
		1	ON	
MW Fnc [11] Minimum Weighing Warning Function	MW-CP Minimum weighing comparison	■ 0	No comparison Do not use MW Fnc	
		1	Comparison without near zero	
		2	Comparison including near zero	
	MW Minimum weighing value input	Refer to "15. Minimum Weighing Warning Function"		
	MW-t Minimum weight tolerance	■ 0	0.10% (standard deviation SDx2000	Refer to "15. Minimum Weighing Warning Function"
		1	1% (standard deviation SDx200 times)	
	Minout Minimum weight out	■ 0	OFF	
		1	ON	
Unit [12] Unit		Refer to "4. Weighing"		
[13] dS Fnc Specific gravity measuring function	Ld in Liquid density input	■ 0	Water temperature	Refer to "18. Density (Gravity) Measurement"
		1	Liquid density	
	dS Specific gravity measuring mode	■ 0	Density measurement of a soil	
		1	Density measurement of a liquid	
ALt [14] Programmable-unit (Multi-unit)		Sets an arbitrary coefficient. See "17. Programmable-Unit".		Available only when programmable-unit mode is selected.
id [15] ID number setting		Refer to "10-2 Setting The ID Number"		

■ Factory setting

Note: "Digit" is a unit of readability.

☐ The number in [ ] is a class number. The numbers are shown as identifier when batching function settings together. Refer to "9-10 Output The Function Settings".

Class	Item	Parameter	Description	
[16] PASSwd Password lock	LocK Lock function	■ 0	OFF	Refer to "19. Password Lock Function"
		1	ON (Limit weighing operation)	
		2	ON (Basic weighing is possible)	
	PASSNo. Password registration	ADMIN	Administrator password input	
		USER01 ~ USER10	USER 1 password input ~ USER 10 password input	
[17] AutoCAL *2 Auto calibration	CFnc Calibration mode	■ 0	Setting temperature	
		1	Setting time	
		2	Interval time	
	Ct iME 1 Setting time1	Refer to "7-1 Automatic Calibration (GX-AE/GX-A Series Only)"		
	Ct iME 2 Setting time2			
	Ct iME 3 Setting time3			
	C int Interval time			
ionFnc *3 Ionizzer function [20]		Refer to the instruction manual of "GXA-17 Large Glass Breeze Break With Ionizer" from our website.		
CS in *2 Correction of internal mass value [18]		Auto	Automatic input	Refer to "7-7-1 Correcting The Internal Mass Value Of The GX-AE/GX-A series (Auto)
		MANUAL	Digital input of correction value	Refer to "7-7-2 Correcting The Intenal Mass Value Of The GX-AE/GX-A series (Manual)

■ Factory setting

Note: "Digit" is a unit of readability.

☐ The number in [ ] is a class number. The numbers are shown as identifier when batching function settings together. Refer to "9-10 Output The Function Settings".

*2 GX-AE/GX-A series only.

*3 GX-AE series only.

9-3 Description Of The Class Environment Display

Condition (Cond)

Cond 0 This parameter is for sensitive response to the fluctuation of a mass value. Used for powder target mass, weighing a very light sample or when quick response weighing is required. After setting, the balance displays FAST.

Cond 2 This parameter is for stable weighing with slow response. Used to prevent a mass value from drifting due to vibration or drafts. After setting, the balance displays SLOW.

Stability band width (St-b)

This item controls the width to regard a mass value as a stable value. When the fluctuation per second is less than the parameter, the balance displays the stabilization indicator and outputs or stores the data by function setting (dout dAtA, etc.) The parameter influences the "Auto print mode". Also, the readability being displayed is 1 digit.

Ex. If 0.01 g display is selected by pressing the SAMPLE key on the GX-303A, 0.01 g is 1 digit.

St-b 0 This parameter is used for sensitive response of the stabilization indicator. Used for exact weighing.

St-b 2 This parameter ignores slight fluctuations of a mass value. Used to prevent a mass value from drifting due to vibration or drafts

Hold function (Hold) (Animal weighing mode)

This function is used to weigh a moving object such as an animal. When the weighing data is over the weighing range from zero and the display fluctuation is within the stabilization range for a fixed period of averaging time, the processing indicator illuminates and the balance displays the average weight of the animal. When the animal or sample is removed from the weighing pan, the display returns to zero automatically. This function is available only when the hold function parameter is set to "1" (the animal mode indicator HOLD illuminates) and any weighing unit other than the counting mode is selected. The stabilization range and averaging time are set in "Condition (Cond)" and "Stability band width (St-b)".

Weighing range	
0.0001g model	0.0200g or more
0.001g model	0.200g or more
0.01g model	2.00g or more
0.1g model	20.0g or more

Averaging time	
Cond0	2 sec.(Efficiency priority)
Cond1	4 sec.
Cond2	8 sec.(Exact priority)

Stabilization range		
St-b 0	Lesser	6.25%
St-b 1	⇕	12.5%
St-b 2	Greater *	16.7%

* Animal container kit (GXA-12) can be installed except GX-203A, GX-124A, GX-224A, GX-124AE, GX-224AE, GF-203A, GF-124A, GF-224A.

Zero tracking (trc)

This function tracks zero point drift caused by changes in the environment and stabilizes the zero point. When the weighing data is only a few digits, turn the function off for accurate weighing.

trc 0 The tracking function is not used. Used for weighing a very light sample.
trc 1 The normal tracking function is used.(±1 digit / 1 second)
trc 2 The strong tracking function is used. (±1 digit / 0.5 second)
trc 3 The very strong tracking function is used. (±2 digit / 0.2 second)

Display refresh rate (SPd)

The periodic time to refresh the display. This parameter influences "Baud rate", "Data output pause" and the data output rate of "Stream mode".

Decimal point (Pnt)

The decimal point format can be selected.

Auto display-ON (P-on)

When the AC adapter is plugged in, the display is automatically turned on without the ON:OFF key operation, to display the weighing mode. Used when the balance is built into an automated system. Half an hour warm up (more than one hour for 0.0001g models) is necessary for accurate weighing.

Auto power-OFF (P-oFF)

This is a function to turn off only the display automatically when there is no operation made for a certain amount of time (approximately 10 minutes) while the power is on.

Readability (rnG)

When weighing with rough precision, the readability can be turned off without key operation. This is useful when built into an automated system.

Buzzer (bEEP)

Select ON/OFF for the built-in buzzer that sounds when a key is operated or the status changes.

Tare value record (P-ZEro)

After turning on the power supply, the display will not be automatically set to zero, and it will start from the previous weighing value. This is useful when a hopper, etc. is attached to the weighing pan and the power needs to be turned off while weighing discharge.

Backlight brightness (diSP-LEd)

Select the brightness of the backlight of the LCD display.

Bubble sprit level lightning (LV-LEd)

Select ON/OFF for the LED that illuminates the bubble sprit level.

Impact shock detection (iSd)

Select ON / OFF for the function to display impact level.

* Applicable from balance software version 1.300 or later.

Even if the function to display impact level is turned off, it is recorded inside the balance when there is an impact.

9-4 Description Of The Data Output

Download "Communication manual" from our website **(https://www.aandd.jp)** and refer to it.

9-5 Description Of The Data Format

Download "Communication manual" from our website **(https://www.aandd.jp)** and refer to it.

9-6 Output Example Of The Data Format

Download "Communication manual" from our website **(https://www.aandd.jp)** and refer to it.

9-7 Clock And Calendar Function

The balance is equipped with a clock and calendar function. When the Clock and Calendar function (dout, S-td) is set, the time and date are added to the output data.
Set or confirm the time and date as follows:

Operation

1. Press and hold the SAMPLE key for 2 seconds until bASFnc of the function table is displayed in the weighing mode, then release the key.
2. Press the SAMPLE key several times to display CLAdJ.
3. Press the PRINT key.
   The balance enters the mode to confirm or set the time and date.

Confirming the time

4. The current time is displayed with all the digits blinking.
   - ☐ When the time is not correct and is to be changed, press the RE-ZERO key and go to "5".
   - ☐ When the time is correct and the date is to be confirmed, press the SAMPLE key and go to "6".
   - ☐ When the time is correct and the date does not need to be confirmed, press the CAL key and go to "8".

Setting the time

5. Set the time in 24-hour format using the following keys.
   - RE-ZERO (+) key·· To increase the value by one.
   - MODE (−) key ····· To decrease the value by one.
   - SAMPLE key····· To select the digits to change the value. The selected digits blink.
   - PRINT key····· To store the new setting, display End and go to "6".
   - CAL key····· To cancel the new setting and go to "6"

Confirming the date

6. The current date is displayed with all the digits blinking.
   - ☐ To change the display order of year (Y), month (m) and day (d), press the MODE key. The date is output in the order as specified.
   - ☐ When the date is not correct and is to be changed, press the RE-ZERO key and go to "7".
   - ☐ When the date is correct and the operation is to be finished, press the CAL key and go to "8".
   - ☐ When the time is to be confirmed again, press the SAMPLE key and go back to "4".

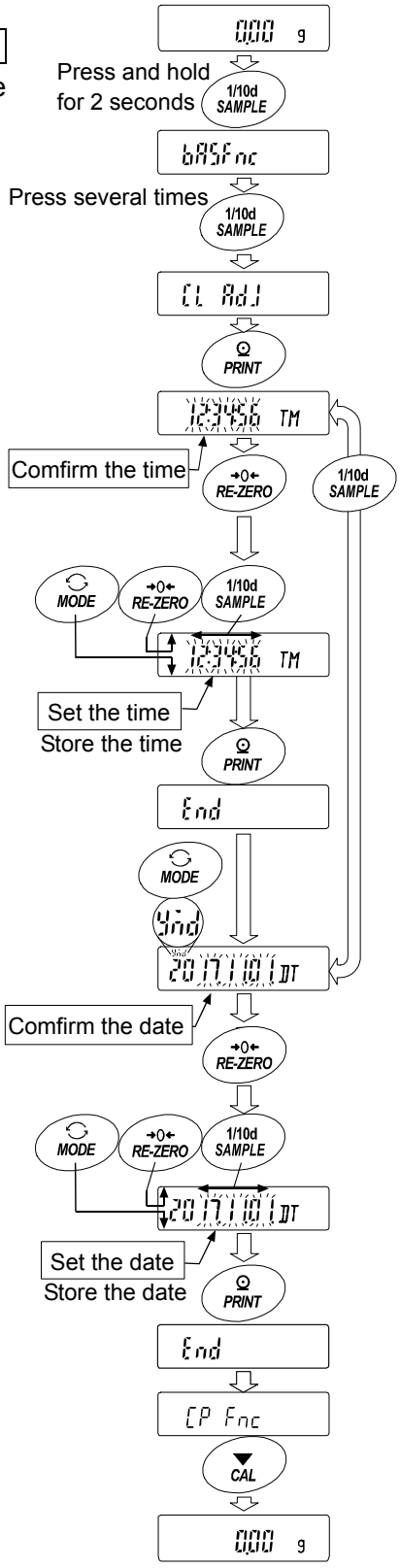

Setting the date

7. Set the date using the following keys. (The year is set with the last 2digits of the Christian era)
   - RE-ZERO (+)key ···· To increase the value by one.
   - MODE (−)key ····· To decrease the value by one.
   - SAMPLE key····· To select the digits to change the value. The selected digits blink.
   - PRINT key ····· To store the new setting, display End and go to "8".
   - CAL key ····· To cancel the new setting and go to "8".

Quitting the operation

8. The balance displays the next menu (CP Fnc) of the function table. Press the CAL key to exit the clock and calendar function and return to the weighing mode.

Note **Do not enter invalid values such as a non-existing date when setting the time and date. When the clock backup battery has been depleted, the balance displays rtc PF. Under this condition, press any key and set the time and date. The dead battery only affects the clock and calendar function. Even so, the function works normally as long as the AC adapter is connected to the balance.**

9-8 Comparator Function

The comparison of comparators can select 3-steps or 5-steps (CP Fnc, CP-t) and it is set to 3-steps at the factory setting.

When 3-step comparator is set, the results of the comparison are indicated by HI OK LO on the display.

When 5-step comparator is set, HH is indicated by HI blinking and LL by LO blinking.

By using GXA-04, it is possible to output the comparison result at the contact point.

There are three types of scope that can be selected as follows.

- No comparison
- Comparison when the weight data is stable or overloaded
- Continuous comparison

The conditions for comparing near zero are in six levels from "including near zero" to "± 100 digits".

"Upper limit value and lower limit value" and "reference value and tolerance range" are the comparison standards.

"Digital input" and "Input by sample load" are the for each value input methods for each value.

Refer to the function setting CP Fnc.

By setting the function setting CP bEEP, it is also possible to sound an internal buzzer depending on the result of the comparison.

3-step comparison result

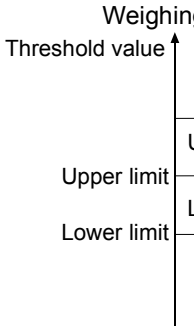

Judgment formula	3-step comparison - display			
	Judgment result	Lit display	Blinking display	Buzzer control
Upper limit value < Weighing value	HI	HI		bEP Hi
Lower limit value ≦ Weighing value ≦ Upper limit value	OK	OK		bEP ok
Weighing value < Lower limit value	LO	LO		bEP Lo

5-step comparison result

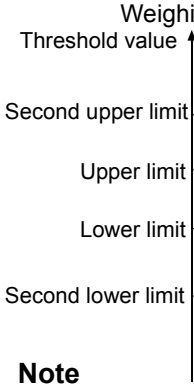

Judgment formula	5-step comparison - display			
	Judgment result	Lit display	Blinking display	Buzzer control
2nd Upper limit value < Weighing value	HH		HI	bEP HH
Upper limit value < Weighing value ≦ 2nd Upper limit value	HI	HI		bEP Hi
Lower limit value ≦ Weighing value ≦ Upper limit value	OK	OK		bEP ok
2nd Lower limit value ≦ Weighing value < Lower limit value	LO	LO		bEP Lo
Weighing value < 2nd Lower limit value	LL		LO	bEP LL

Note

☐ The comparator function in the flow measurement mode (APF3) is compared at the factory setting with the flow rate value. By setting CP-Frd of the Function table CP Fnc to "1", it is also possible to compare with weight value (g unit).

Selecting comparators (3-steps and 5-steps)

1. Press and hold the [SAMPLE] key for 2 seconds until [bASFnc] of the function mode is displayed.
2. Press the [SAMPLE] key several times to display [CP Fnc].
3. Press the [PRINT] key.
4. Press the [SAMPLE] key several times to display [CP-t].
5. Press the [RE-ZERO] key to select “0” for 3 steps or “1” for 5 steps. Press the [PRINT] key to set.
6. Press the [CAL] key to return to the weighing mode.

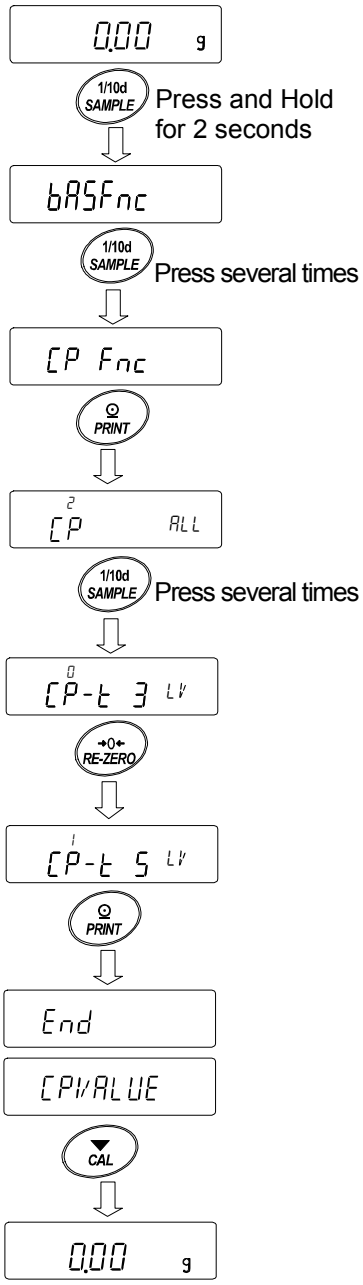

Example1

(Always compare except "near zero" ± 20 digits and digitally input reference value and scope.)

Selecting a comparator mode (scope, comparison criteria and value for 3 step- comparator)

1. Press and hold the [SAMPLE] key for 2 seconds until [bASFnc] of the function table is displayed, then release the key.
2. Press the [SAMPLE] key several times to display [CP Fnc].
3. Press the [PRINT] key.
4. Press the [RE-ZERO] key several times to display [CP ALL] (" 2 " always compare).
5. Press the [SAMPLE] key several times to display [CP-Z].
6. Press the [RE-ZERO] key several times to display [CP-Z Ex 20d] (" 3 " ± 20 digit is not compared.)
7. Press the [SAMPLE] key several times to move to [CP in].
8. Press the [RE-ZERO] key several times to display [CP inrFE DIG]. (" 2 " reference value is set. digital input)
9. Press the [PRINT] key to store the selected mode.

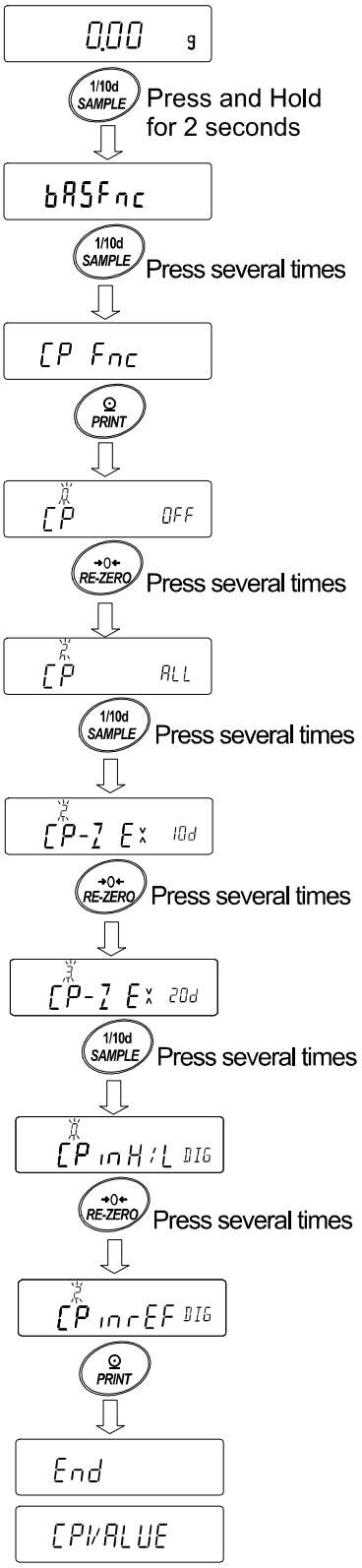

Entering the values

10. With [CP VALUE] displayed, press the [PRINT] key.
11. Display [CP rEF].
12. Press the [PRINT] key.
13. The current setting value is displayed with all of the digits blinking.
14. When the current setting is not to be changed, press the [PRINT] or [CAL] key to go to "15".

    When the current setting is to be changed, press the [RE-ZERO] key and store the following keys.

    [SAMPLE] key··· Select the digit to change the value.
    [RE-ZERO] key · Change the value of the digit selected.
    [MODE] key ····· Switch the polarity.
    [PRINT] key ····· Store the new setting and go to "15".
    [CAL] key ····· Cancel the new setting and go to "15".

15. When [CP LMt] is displayed, pressing the [PRINT] key will display the currently set value.

    If changing the setting value, it can be registered the tolerance value with the following keys.

    For tolerance value, enter the value with the reference value set to 100%.

    [SAMPLE] key ····· Move the blinking digit.
    [RE-ZERO] (+)key ·· Change the value of the blinking digit.
    [MODE] (-)key ····· Change the value of the blinking digit.
    [PRINT] key ····· Register and go to "16"
    [CAL] key····· Cancel and go to "16"

16. Press the [CAL] key twice to return to the weighing display.

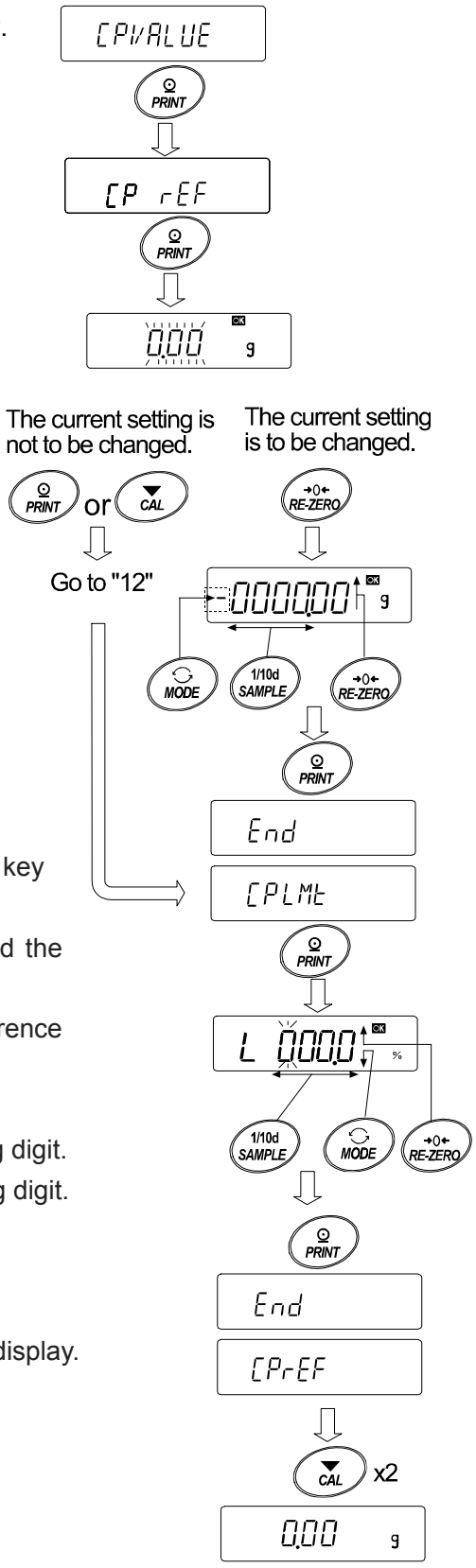

Example 2

(Continuous comparison, including "near zero", reference value and tolerance value.)

Selecting a comparator mode (scope, comparison criteria and value for 3-step comparator)

1. Press and hold the [SAMPLE] key for 2 seconds until [bASFnc] of the function table is displayed, then release the key.
2. Press the [SAMPLE] key several times to display [CP Fnc].
3. Press the [PRINT] key.
4. Press the [RE-ZERO] key several times to display [CP STAb].
   ("1" compared when stable and over)
5. Press the [SAMPLE] key several times to display [CP-Z].
6. Press the [RE-ZERO] key several times to display [CP-Z IN].
   ("0" near zero is also compared.)
7. Press the [SAMPLE] key several times to display [CP in].
8. Press the [RE-ZERO] key several times to display [CP inH/L WT].
   ("1" upper-lower limit is set. Input by loaded.)
9. Press the [PRINT] key to store the new setting.

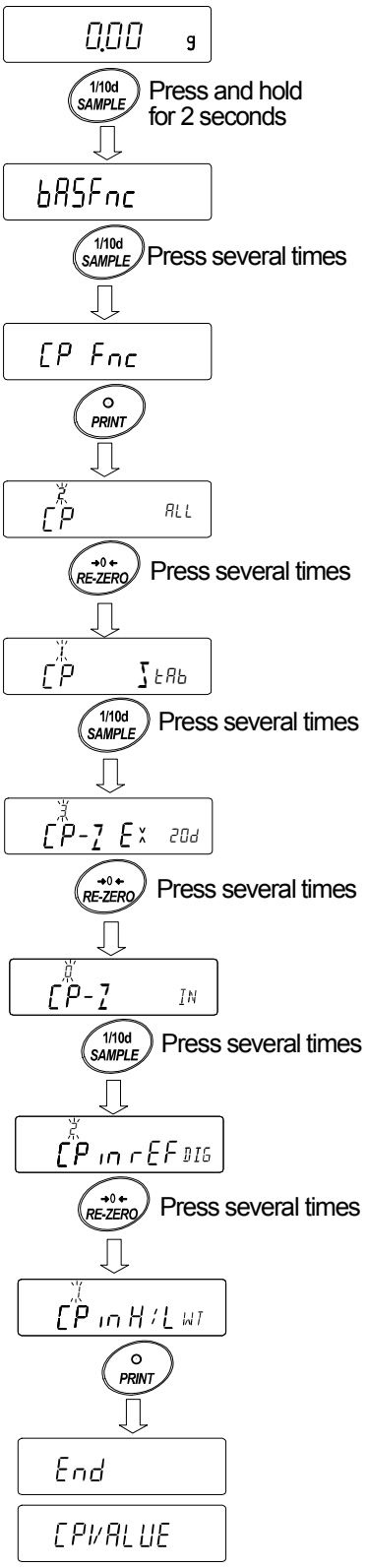

Entering the reference and tolerance values

10. When [CPVALUE] is displayed, press the [PRINT] key. [CP Hi] will be displayed.

11. When [CP Hi] is displayed, press the [PRINT] key to check the currently set value (all blinking). Press the [RE-ZERO] key to enter the load input mode.

12. Press the [RE-ZERO] key, [0.00 g] is displayed. Place a sample of the weight of the upper limit on the balance and press the [PRINT] key. (Register the upper limit value.)

13. When finished, [CP Lo] is displayed. (Replace a sample of the weight of the upper limit from the balance.)

14. When [CP Lo] is displayed, press the [PRINT] key to check the currently set value (all blinking). Press the [RE-ZERO] key to enter the load input mode.

15. Press the [RE-ZERO] key, [0.00 g] is displayed.

16. Place a sample of the weight of the lower limit on the balance and press the [PRINT] key. (Register the lower limit value.)

17. When finished, [CP Hi] is displayed. (Replace a sample of the weight of the lower limit from the balance.)

18. Press the [CAL] key twice to return to the weighing display.

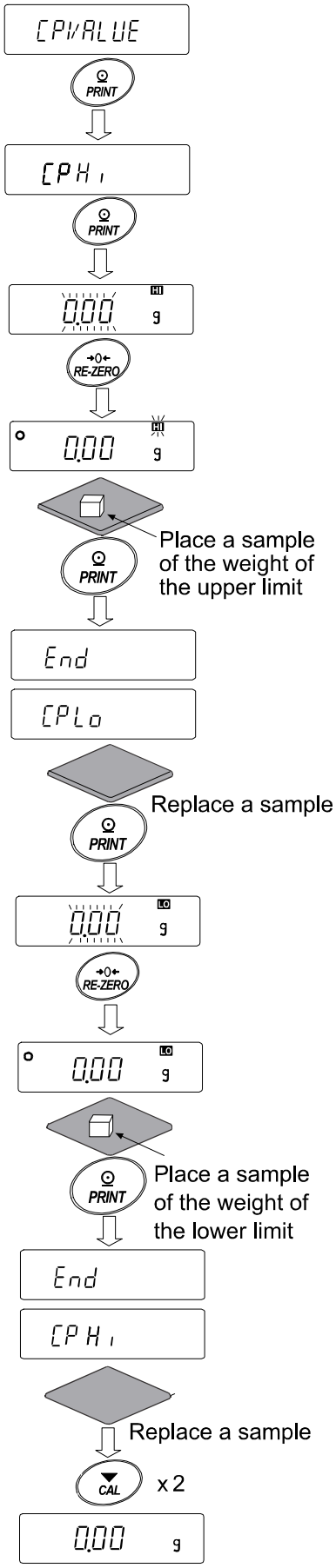

Sound the built-in buzzer corresponding to the comparison result.

1. Press and hold the [SAMPLE] key for 2 seconds until [bASFnc] of the function table is displayed.

2. Press the [SAMPLE] key several times to display [CP bEEP].

3. Press the [PRINT] key.

4. Press the [SAMPLE] key to set the buzzer sound setting of the comparison result "ON/OFF".
   When 3-step comparator is set, the display can be selected from the following 3 kinds
   [bEP Hi] [bEP ok] [bEP Lo].*
   When 5-step comparator is set, the display can be selected from the following 5 kinds
   [bEP HH] [bEP Hi] [bEP ok] [bEP Lo] [bEP LL].*

   [SAMPLE] key ····· Select the comparison result.
   [RE-ZERO] key ····· Set the buzzer sound setting for the comparison result to ON/OFF.
   [PRINT] key ····· Store the setting.

5. Press the [PRINT] key to set the buzzer sound setting for the comparison result. [End] is displayed and then [dout] is displayed.

6. Press the [CAL] key to return to weighing mode.

* Please refer to “Selecting comparators (3-steps and 5-steps)" on page 65 regarding about the comparator stage settings.

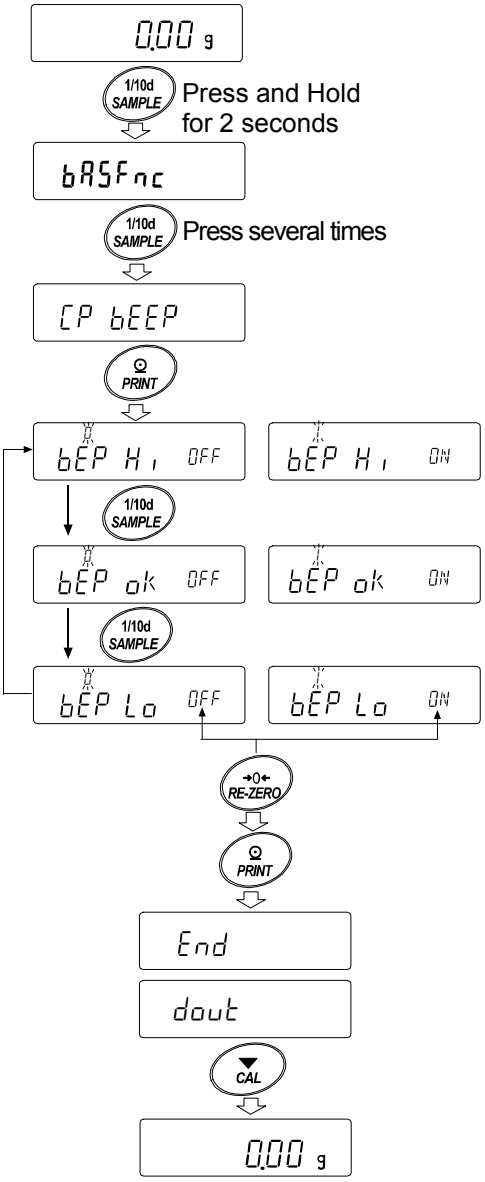

9-9 Description Of Application

Description of the normal weighing mode (APF 0).

The normal weighing mode of the factory setting.

Description of the weighing indicator mode (APF 1).

The weighing indicator displays the relation between load and weight in percent in normal weighing.

(Zero 0%, weighing 100%)

Note:

☐ It can not used with the settings " dAtA 1 or dAtA 2 " that use the data memory function (dAtA).

Description of the statistical calculation mode (APF 2).

This is a function to statistically calculate the weighing value and to display and output the result.

Refer to "12. Statistical Calculation Mode " .

Description of the flow measurement mode (APF 3).

It is a function to calculate the flow measurement .

Refer to "13. Flow Measurement " .

Description of the gross net tare mode (APF 4).

This is a function to operate the setting and taring separately and to output the data of Gross (total amount), Net (net amount) and Tare (tare quantity).

Refer to "14. Gross Net Tare Function".

9-10 Output The Function Settings

With function settings, you can set the balance's operation to that appropriate for how it is used.
In the menu structure of function settings, there are setting items in the classification item, and one setting value is registered in each setting item.
The status of function settings can be batch output and recorded by the following operation.
* This applies for balance software version 1.300 or later.

Procedure for batch output of function setting

1. Press and hold the SAMPLE key for 2 seconds in weighing mode.
2. bASFnc is displayed.
3. Press and hold the PRINT key for 2 seconds. -LiSt- is displayed and current settings information is batch output.

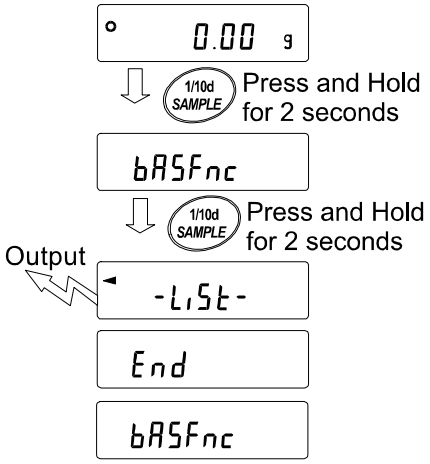

Example of output

```
            A & D
MODEL      GX-324A   ← Type
S/N      123456789   ← Serial number
ID        LAB-0123   ← ID
DATE     2019/01/22  ← Date  } Output date and time of the balance
TIME       16:29:35  ← Time  }
----------------
 Function Table
----------------
00,Cond     ,1
00,St-b     ,1
00,HoLd     ,0
00,trc      ,1
00,SPd      ,0
00,Pnt      ,0
00,P-on     ,0
00,P-oFF    ,0
00,rnG      ,0
00,bEEP     ,0
00,P-ZEro   ,0
00,diSP-LEd ,5
00,LV-LEd   ,0
a  b      c
 ⋮
02,CP-Z     ,2
02,CP-P     ,2
02,CPin     ,0
10,Frd Unit,0
10,Ct AUto ,0
----------------
11,MW-CP    ,0
11,MW       , 001.0000  g
11,MW-t     ,0
11,Min out ,1
----------------
13,Ldin     ,0
13,dS       ,0
----------------
16,LocK     ,0
----------------
17,CFnc     ,0
17,Cint     ,0
----------------
END
```

a. Classification number (2 digits)
b. Item (8 characters)
c. Parameter (1 or 12 digits)
*Each item is divided by a comma.
Please refer to "9-2 Details Of The Function Table" for the classification numbers, items and parameters.

Example 1　Output the function settings to a printer

Please use a multi-printer AD-8127 for printing.

1. Connect the balance and the printer.
   When using the AD-8127, set the print mode to "DUMP". For details on setting and print mode, refer to the printer's instruction manual. For the connection of the balance and the printer, refer to "Communication Manual" from our website (https://www.aandd.jp).
2. Check that the balance and the printer can communicate, and output refer to “Procedure for batch output of function setting” in the previous section.

Example 2　Output the function settings to a computer

For more information about USB and WinCT settings, visit our website (https://www.aandd.jp) and refer to "Communication Manual" and "WinCT Operation Manual".

1. Connect the PC and balance with the supplied USB cable or RS-232C cable (sold separately).
   * When using USB, please use in virtual COM mode. Output is not possible with Quick USB.
2. Install WinCT on your PC.
   WinCT can be downloaded from our website (https://www.aandd.jp).
3. Start RSCom and match the communication settings such as COM port and baud rate with the balance.
   When the [Start] button is pressed, communication becomes possible.
4. Check that the PC and the balance can communicate, and follow the previous section “Procedure for batch output of function setting” to output.

10.ID Number And GLP Report

10-1 Main Objective

☐ The data output compatible with "GLP/GMP" can be output to a personal computer or printer using the RS-232C serial interface.

☐ The GLP / GMP compliant report includes the balance manufacturer, model, serial number, ID number, date, time and space for signature. It includes the results and using mass for calibration or calibration test data.

☐ The balance can output the following GLP/GMP compliant reports from RS-232C or USB.

・"Calibration report" of the calibration, using the internal mass (Calibration due to changes in auto and one-touch calibration.)

・"Calibration report" of the calibration, using an external weight.

・"Calibration test report" of the calibration test, using an external weight.

・"Title block" and "End block" for the weighing data.

☐ Calibration report and calibration test data can be stored in memory to output several reports at the same time. Refer to "11. Data Memory" for details.

☐ The ID number is used to identify the balance when the balance is used for maintenance management.

☐ The ID number is maintained in non-volatile memory even if the AC adapter is removed.

☐ For details on confirming and setting the time and date, Refer to "9-7 Clock And Calendar Function".

☐ When printing the GLP output by connecting a multi-printer AD-8127 to the balance, the clock function of the printer can be used to print the time and date. (Function setting "inFo 2") (Balance software version 1.211 or later)

This is enabled when centrally managing prevention of tampering of time and date with the password lock function on the AD-8127 side.

Note

When outputting GLP / GMP compliant reports, the print mode of AD-8127 is set to dump print mode. If the weighing value was printed in the external key printing mode, press and hold the [ENT] key on the AD-8127 for 2 seconds to switch between the external print mode and the dump print mode).

10-2 Setting The ID Number

1. Press and hold the [SAMPLE] key for 2 seconds until [bASFnc] of the function table is displayed, then release the key.
2. Press the [SAMPLE] key several times to display [id].
3. Press the [PRINT] key. Set the ID number using the following keys.
   [SAMPLE] key····· To select the digit to change the value.
   [RE-ZERO] key, [MODE] key···· To set the character of the digit selected.
   [PRINT] key····· To store the new ID number and display [PASSwd].
   [CAL] key····· To cancel the new ID number and display [PASSwd].
4. With [PASSwd] displayed, press the [CAL] key to return to the weighing mode.

Note

The display segment of the balance is divided into 4 types.

For each segment display, refer to the "Display correspondence table" in the next page.

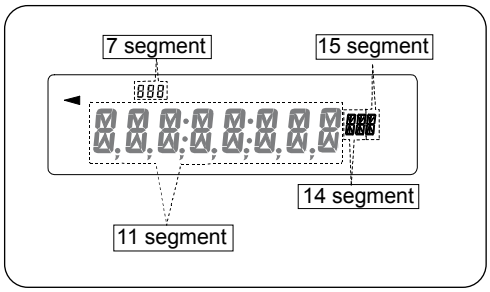

Display correspondence table

11 Segment

0	1	2	3	4	5	6	7	8	9	−	␣	A	B	C	D	E	F	G	H	I	J	K	L	M	N	O	P	Q	R	S	T	U	V	W	X	Y	Z
0	1	2	3	4	5	6	7	8	9	-		A	B	C	D	E	F	G	H	I	J	K	L	M	N	o	P	Q	R	S	t	U	V	W	X	Y	Z

␣ Space

7 Segment

0	1	2	3	4	5	6	7	8	9	−	␣	A	B	C	D	E	F	G	H	I	J	K	L	M	N	O	P	Q	R	S	T	U	V	W	X	Y	Z
0	1	2	3	4	5	6	7	8	9	-		A	b	C	d	E	F	G	H	I	J	K	L	M	N	O	P	q	r	S	t	U	V	W	X	Y	Z

␣ Space

14 Segment

0	1	2	3	4	5	6	7	8	9	−	␣	A	B	C	D	E	F	G	H	I	J	K	L	M	N	O	P	Q	R	S	T	U	V	W	X	Y	Z
0	1	2	3	4	5	6	7	8	9	-		A	B	C	D	E	F	G	H	I	J	K	L	M	N	O	P	Q	R	S	T	U	V	W	X	Y	Z

␣ Space

15 Segment

0	1	2	3	4	5	6	7	8	9	−	␣	A	B	C	D	E	F	G	H	I	J	K	L	M	N	O	P	Q	R	S	T	U	V	W	X	Y	Z
0	1	2	3	4	5	6	7	8	9	-		A	B	C	D	E	F	G	H	I	J	K	L	M	N	O	P	Q	R	S	T	U	V	W	X	Y	Z

␣ Space

10-3 GLP Report

Set the function setting to "InFo 1" (use data of clock built in to the balance) or "InFo 2" (use clock data of external equipment) to output the GLP / GMP data with a AD-8127 (multi printer) or personal computer.

Note

- ☐ In case of outputting clock data built in the balance (InFo 1), if the time and date are not correct, set the correct time and date in "Clock (CLAdJ)" of the function table.
- ☐ The setting of "InFo 2" can be set with the balance of software version 1.211 or later.

Calibration report using the internal mass

This is the GLP report when the balance is calibrated using the internal mass.

□ Output the clock data of built in balance (InFo 1)

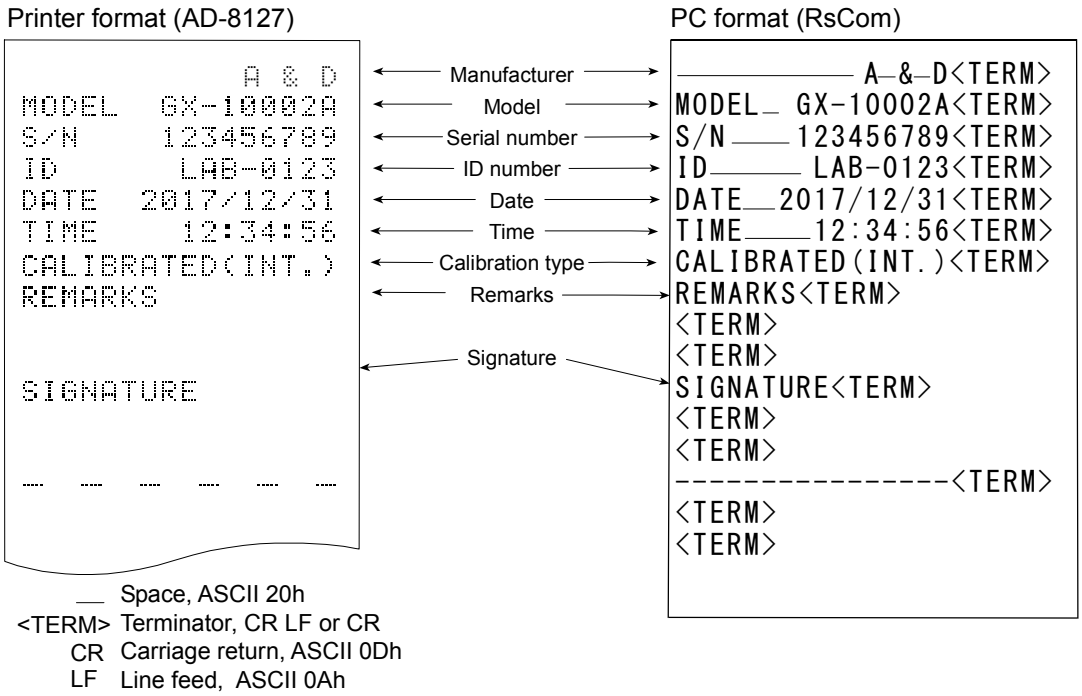

␣ Space, ASCII 20h
<TERM> Terminator, CR LF or CR
CR Carriage return, ASCII 0Dh
LF Line feed, ASCII 0Ah

Output the clock data of external device (InFo 2).

By setting the function table " InFo 2 " when outputting data such as GLP/GHP etc. It is possible to use the clock data of the external device such as PC or printer, not the built in balance data.

Note

□ Clock data output from external device is for devices that have a clock function and can receive date and time data by receiving <ESC>D, <ESC>T.(Ex. AD-8127 multi printer, RsCom WinCT etc.)

□ When saving the calibration history of the data memory function, the built in clock data is saved even if it is set to " InFo 2 "

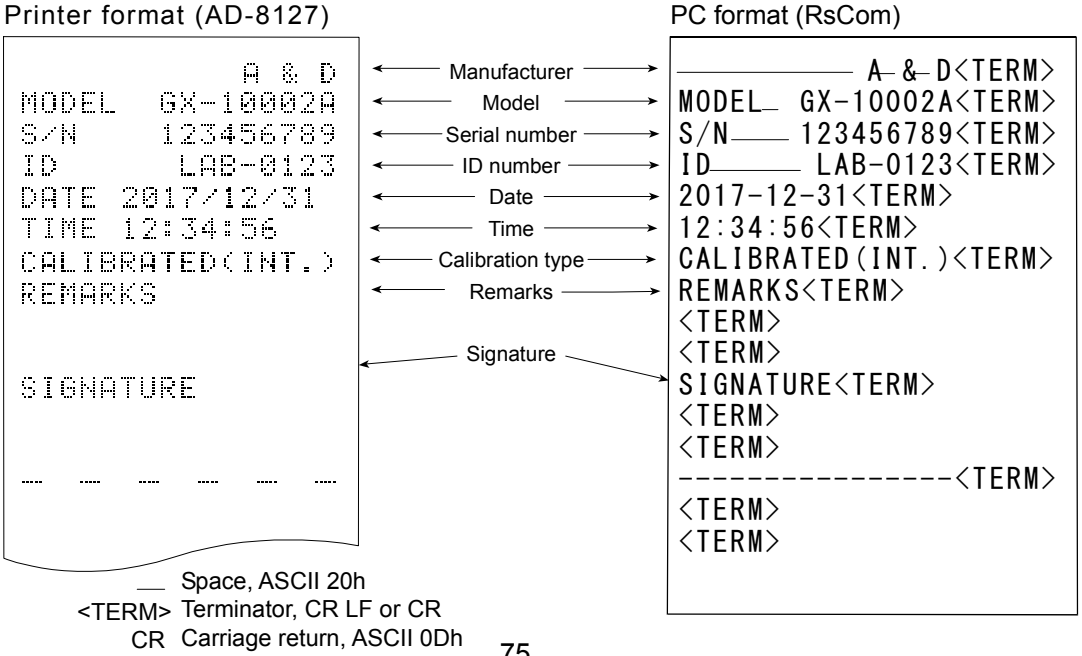

␣ Space, ASCII 20h
<TERM> Terminator, CR LF or CR
CR Carriage return, ASCII 0Dh
LF Line feed, ASCII 0Ah

Calibration test report using the internal mass (0.0001g models only)

This is the GLP report when checking the weighing accuracy of the balance with the internal mass. (Adjustment is not performed)

Setting of "inFo1"

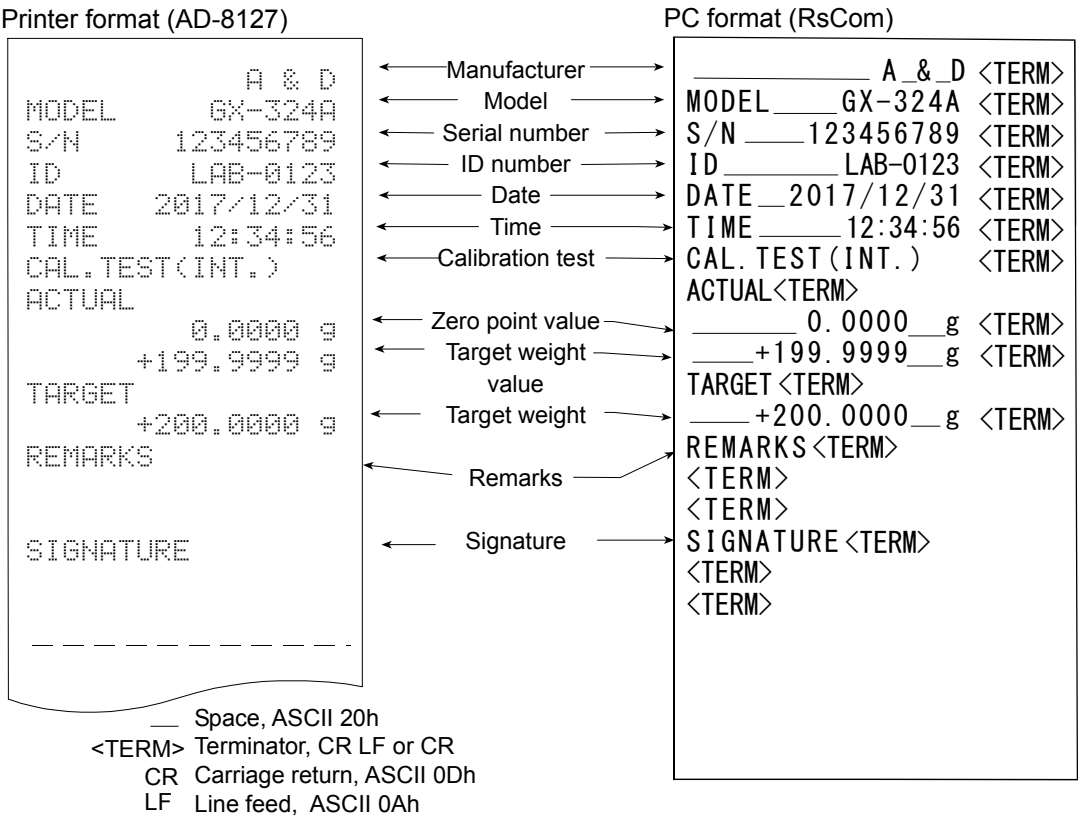

Calibration report using an external weight

This is the GLP report when the balance is calibrated using the external weight.

Setting of inFo1

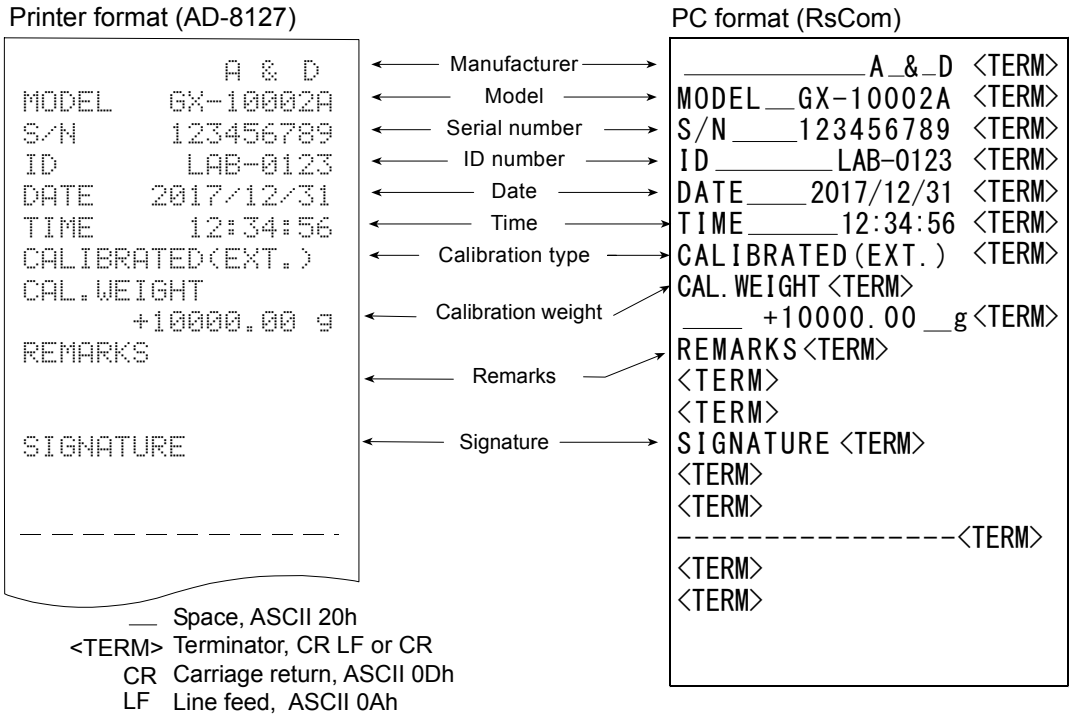

Calibration test report using an external weight

This is the GLP report when checking the weighing accuracy of the balance with the external weight. (Adjustment is not performed)

Setting of inFo1

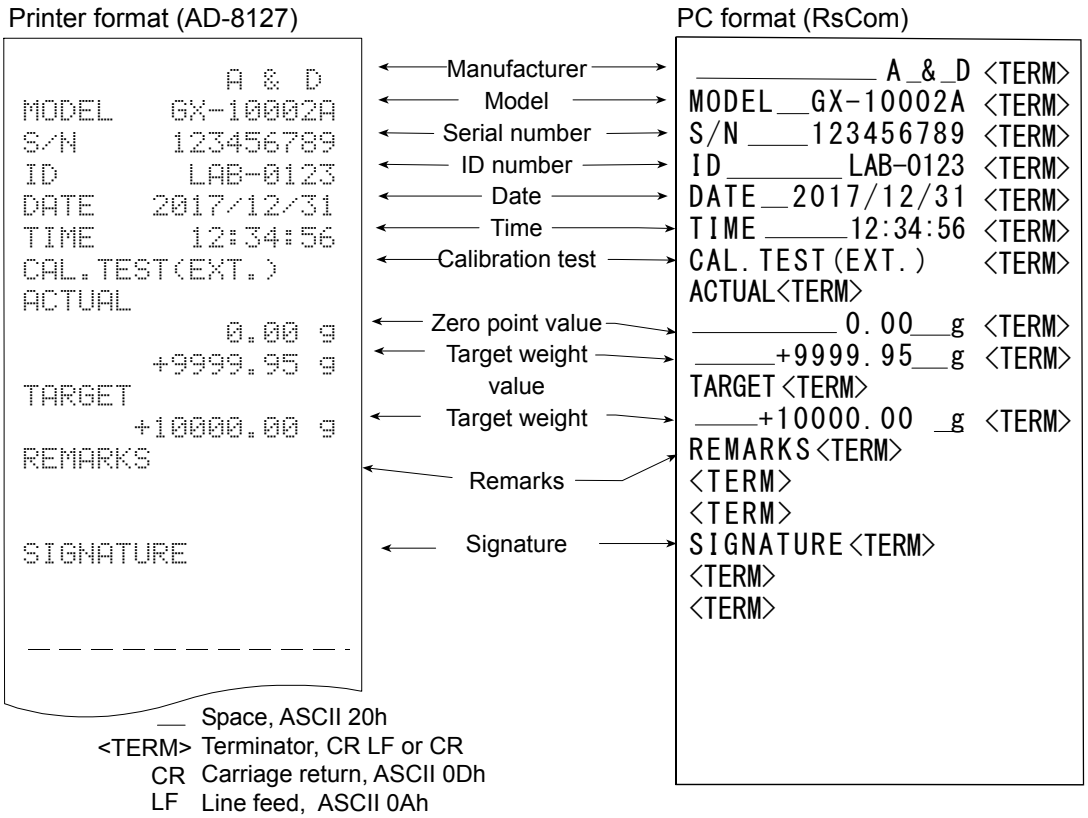

Heading and ending output

Application / Operation

As a method of managing weighing values, add "Heading" and "End" parts before and after the weighing value.

By pressing and holding the [PRINT] key for 2 seconds, "Heading" and "End" are output in turn.

Note

If the data memory function is used, heading and end cannot be output.

Key output method

1. While displaying the weighing value, hold down the [PRINT] key for 2 seconds and display [StArt] to output "Heading".
2. Output the weighing value. The output method depends on the setting of the data output mode.
3. Press and hold the [PRINT] key for 2 seconds to display [rEc End], "End" is output.
   Setting of InFo1

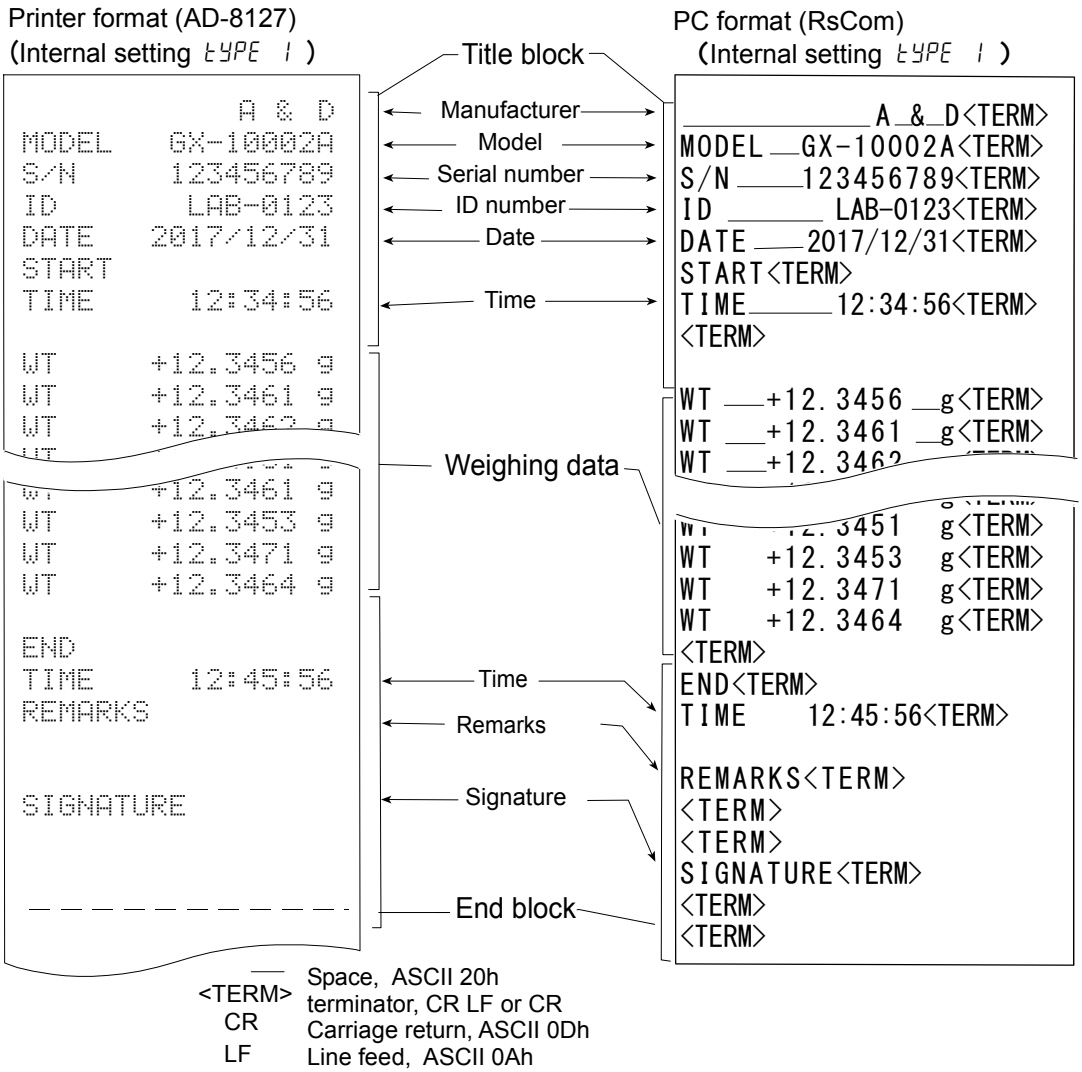

11.Data Memory

Data memory is a function to store weighing data and calibration data in memory. The data stored in memory are available for outputting at one time to a printer or personal computer.

The following six types of data can be stored.

Unit mass (Counting mode)	Up to 50 sets
Weighing value	Up to 200 sets
Calibration report Internal calibration External calibration Calibration test report Internal test calibration (0.0001g models only) External test calibration	Last 50 sets

11-1 Data Memory For Weighing Data

Features

- ☐ It is not necessary to connect the printer or personal computer to the balance continually, because the balance stores the weighing data in memory.
- ☐ By storing the weighing value in the balance, weighing operation can be performed without occupying the printer or PC for a long time.
- ☐ The data in memory can be displayed on the balance for confirmation.
- ☐ Data (ID number, data number, time and date) to be added to the output data can be selected in the function setting.
- ☐ The balance can store 200 sets of weighing data in memory (if time and date are added, the balance can store 100 sets).

  * For the unit mass storage method, refer to "4-3 Counting Mode (PCS)".

Storing the weighing data

Note

1. Set the "Data memory (dAtA)" parameter to "dAtA 2". Refer to "9. Function Table".
2. Specify by the "Time/Date output (S-td)" parameter whether time and date is to be added or not.
3. The storing mode depends on the "Data output mode (Prt)" parameter setting.
   When set to Prt 3 (stream mode), data may not be stored correctly.

* It is also possible to change the time / date setting after storing the weighing value.

Enabling data memory function

1. Press and hold the [SAMPLE] key for 2 seconds until [bASFnc] of the function table is displayed.
2. Press the [SAMPLE] key several times to display [dout].
3. Press the [PRINT] key.
4. Press the [SAMPLE] key several times to display [dAtA].
5. Press the [RE-ZERO] key to display [dAtA Wt/CAL].
6. Press the [PRINT] key to store the setting.
7. Press the [CAL] key to return to the weighing mode.

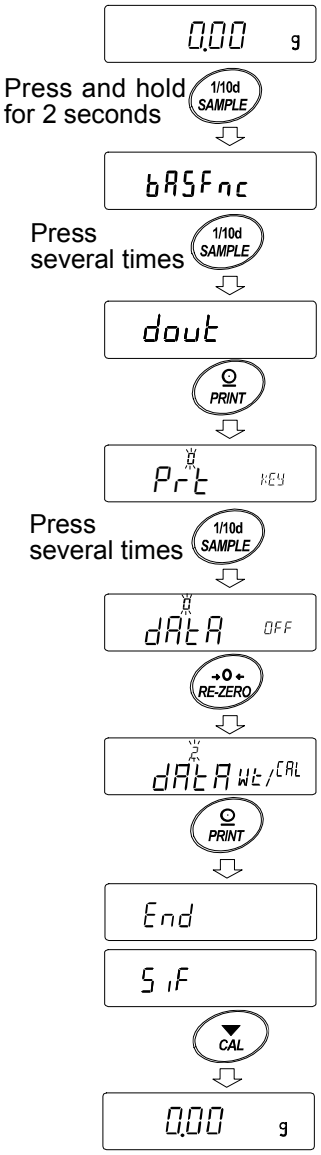

Display and symbol

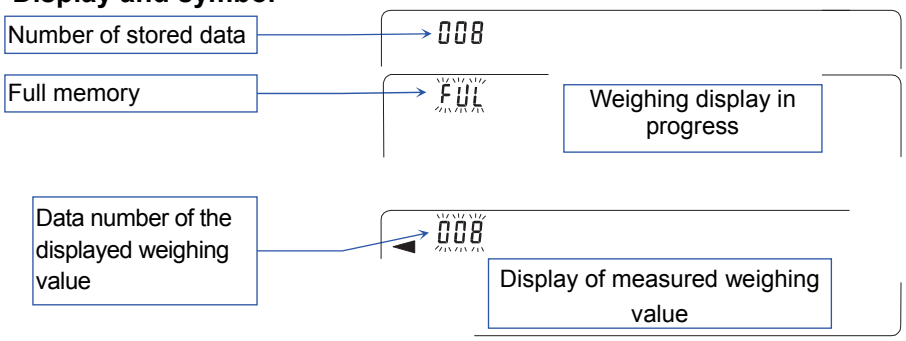

When the volume of measured values stored reaches its maximum, FUL ↔ dAt blink in turn.

Caution

- ☐ When weighing data is being stored in memory, the data is output simultaneously using RS-232C interface or USB.
- ☐ " FUL" indicates that memory is full or the memory capacity has been reached. More data cannot be stored unless the memory data is deleted.
- ☐ Automatic self calibration can not be used while the interval memory mode is active.
- ☐ Statistic calculation function can not be used when the data memory function is active.

Setting the function table

Parameter settings for each output mode are as follows:

Mode \ Item	Data output mode	Auto print polarity, difference	Data memory function	Interval time
Key mode	PrE 0	Not used	dAtA 2	Not used
Auto print mode A	PrE 1	AP-A 0 to 2	dAtA 2	
Auto print mode B	PrE 2	AP-b 0 to 2	dAtA 2	
Key mode B（immediate）	PrE 4	Not used	dAtA 2	
Key mode C（stable）	PrE 5		dAtA 2	
Interval output mode	PrE 6		dAtA 2	int 0 to 8

Parameter settings for Data number, ID number, Time and Date

Data number	No	d-no "0"	Time and date	No	S-td 0	—
	Yes	d-no "1"		Time only	S-td 1	Up to 200 pieces
ID number	No	S-id "0"		Date only	S-td 2	
	Yes	S-id "1"		Both	S-td 3	

Recalling the memory data

Confirm that the "Data memory (dAtA)" parameter is set to " dAtA 2 ".

1. Press and hold the [PRINT] key for 2 seconds until [RECALL] is displayed, then release the key.

   The type of data appears in the upper left of the display as shown to the right "-d- or d-t".

   Left of the display

   -d-

   When setting without clock / date

   or

   d-t

   When setting with clock / date

2. Press the [PRINT] key to enter the memory recall mode.

   Recall the data in memory using the following keys.

   [RE-ZERO] key ····· To proceed to the next data set.
   [MODE] key ····· To go back to the previous data set.
   [PRINT] key····· To transmit the current data using the RS-232C or USB.
   [CAL] key ····· To exit the memory recall mode.

3. Press the [CAL] key to return to the weighing mode.

* It is also possible to change the time / date output setting after storing the weighing value.

Transmitting all memory data at one time

Confirm that the "Serial interface (SIF)" parameters are set properly. Refer to "9. Function Table" and "Communication Manual" on the A&D website (https://www.aandd.jp).

1. Press and hold the [PRINT] key for 2 seconds until [RECALL] is displayed, then release the key.
2. Press the [SAMPLE] key to display [out].
3. Press the [PRINT] key to display [out No] with "No" blinking.
4. Press the [RE-ZERO] key to display [out Go] with "Go" blinking.
5. Press the [PRINT] key to transmit all data using the RS-232C , USB.
6. The balance displays [CLEAR] when all data is transmitted. Press the [CAL] key to return to the weighing mode.

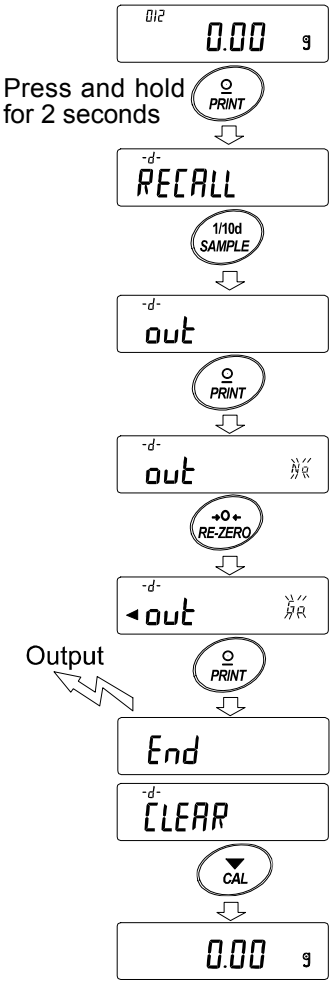

Deleting all memory data at one time

1. Press and hold the [PRINT] key for 2 seconds until [RECALL] is displayed, then release the key.
2. Press the [SAMPLE] key several times to display [CLEAR].
3. Press the [PRINT] key to display [CLEAR No] with No blinking.
4. Press the [RE-ZERO] key to display [CLEAR Go] with Go blinking.
5. Press the [PRINT] key to delete all data
6. The balance displays [End] and returns to the weighing mode.

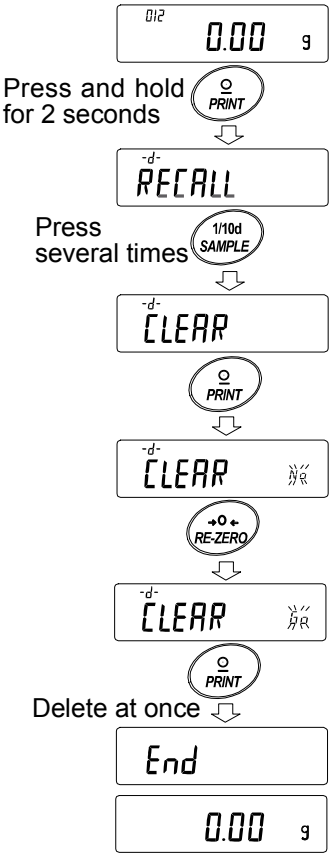

11-2 Data Memory For Calibration And Calibration Test

Characteristic

- ☐ Calibration data (when and how it is performed) and calibration test data can be stored in memory.
- ☐ All the data in memory is available to be output at one time to a printer or personal computer.
- ☐ Up to 50 data sets of the latest calibration or calibration test can be stored.
  * When the memory capacity has been reached to 50, "FUL" ⟷ "CAL" illuminates in order in the upper left of the display as shown below.

Upper left of the display

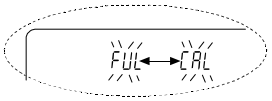

Storing the calibration and calibration test data

1. Set the "Data memory (dAtA)" parameter to "dAtA 2". Refer to "9 Function Table".
2. With the settings above, each time calibration or calibration test is performed, the data is stored automatically.

Transmitting the memory data

1. Press and hold the [CAL] key for 2 seconds during weighing display. When a [CAL HiS] displayed, release your finger from the key to display [out].
   If there is no calibration history, [No dAtA] is displayed, and then the display returns to the weighing display.
2. Press the [PRINT] key to display [out No].
3. Change the [No] / [Go] with the [RE-ZERO] key. Display the [out Go].
4. Press the [PRINT] key to start output at one time while [out Go] is displayed.
   The output format conforms to "GLP output".
5. When output at one time is completed, [CLEAR] displays after [End] is displayed.
6. If the saved history is deleted all at once, please proceed to "How to delete history". To return to the weighing value, press the [CAL] key.

* If the [FUL] ⟷ [CAL] indicators blink in turn during weighing display, 50 instance of data are stored.
If history is saved history in this state, old data will be overwritten. Optionally delete the saved data.

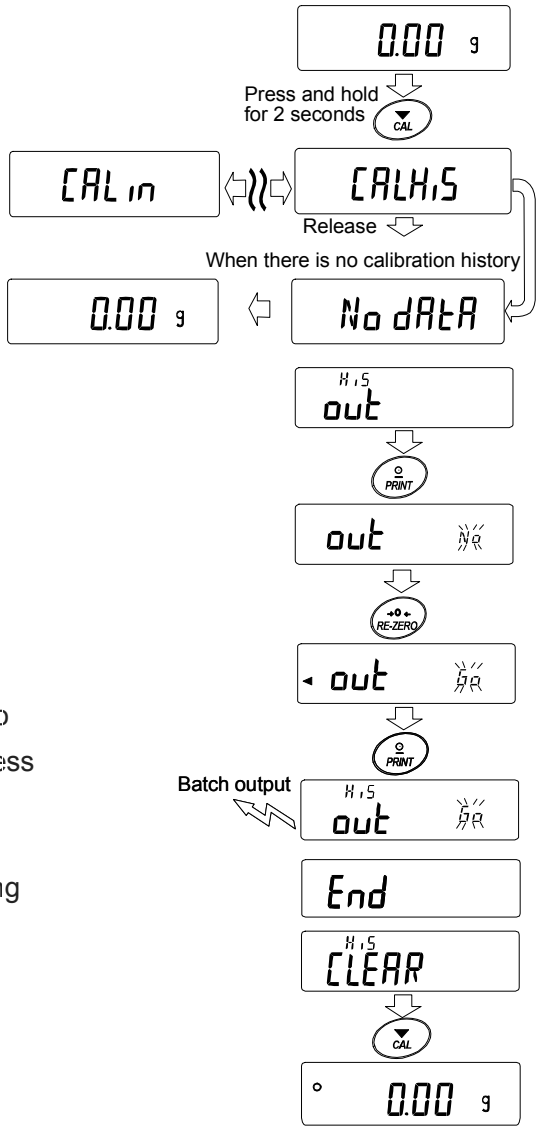

Deleting data stored in memory

1. Press and hold the [CAL] key for 2 seconds until, [CAL HiS] is displayed, then release the key. [out] is displayed.
2. Press the [SAMPLE] key to display [CLEAR].
3. Press the [PRINT] key to display [CLEAR No].
4. Press the [RE-ZERO] key to change [No] / [Go].
   Display [CLEAR Go].

5. Press [PRINT] while [CLEAR Go] is displayed, output at once is started.
6. When the balance displays [End] and returns to the weighing mode.

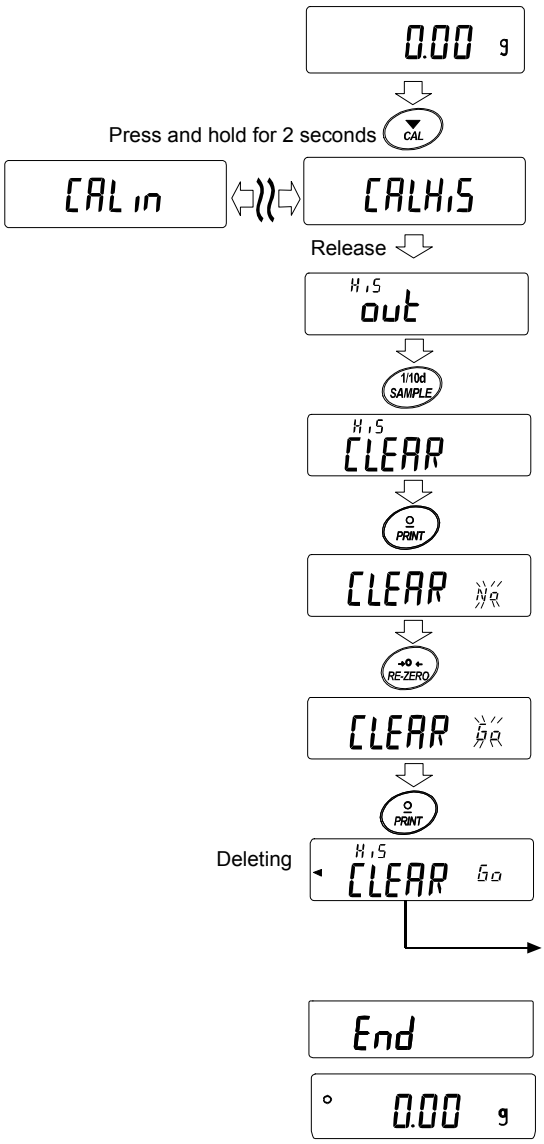

12.Statistical Calculation Mode

The statistical calculation mode statistically calculates the weight data, and displays or outputs the results. To use the statistical calculation mode, set the "Application function (APF)" parameter of "Application (AP Fnc)" in the function table to "2", as described below. To return to the normal weighing mode (factory setting), set "Application mode (APF)" to "0".
Statistical items available are number of data, sum, maximum, minimum, range (maximum-minimum), average, standard deviation and coefficient of variation. What statistical items to output can be selected from the four modes in the function table (STAT) .

- ☐ The wrong data input can be canceled by the key operation, if immediately after the input.
- ☐ Turning the balance off will delete the statistical data.
- ☐ The standard deviation and coefficient of variation are obtained by the equation below:

$$\text{Standard deviation} = \sqrt{\frac{N\cdot\Sigma(X_i)^2-(\Sigma X_i)^2}{N\cdot(N-1)}}$$ where Xi is the i-th weight data, N is number of data.

$$\text{Coefficient of variation (CV)} = \frac{\text{Standard deviation}}{\text{Average}} \times 100\ (\%)$$

$$\text{Relative error of maximum value} = \frac{\text{Maximum value} - \text{Average}}{\text{Average}} \times 100\ (\%)$$

$$\text{Relative error of minimum value} = \frac{\text{Minimum value} - \text{Average}}{\text{Average}} \times 100\ (\%)$$

Note

- ☐ When there is data with a readability digit off, the calculation result is displayed with the readability digit off. (Readability digit is rounded off.)
- ☐ When the data memory function is in use, the statistical calculation function cannot be used.
- ☐ When registering the warning function of the minimum weighing value, the statistical calculation function cannot be used.

12-1 How To Use The Statistical Calculation

Switching to the Statistical Function Mode (Changing The Function Table)

1. Press and hold the SAMPLE key for 2 seconds until bASFnc of the function table is displayed, then release the key.
2. Press the SAMPLE key several times to display AP Fnc.
3. Press the PRINT key to display °APF Norm.
4. Press the RE-ZERO key several times to display APF SEtt.

   To select statistical items to output, go to step 5.
   To store the statistical function mode setting, go to 7.
   To disable the statistical calculation mode, press the RE-ZERO key to select °APF Norm.

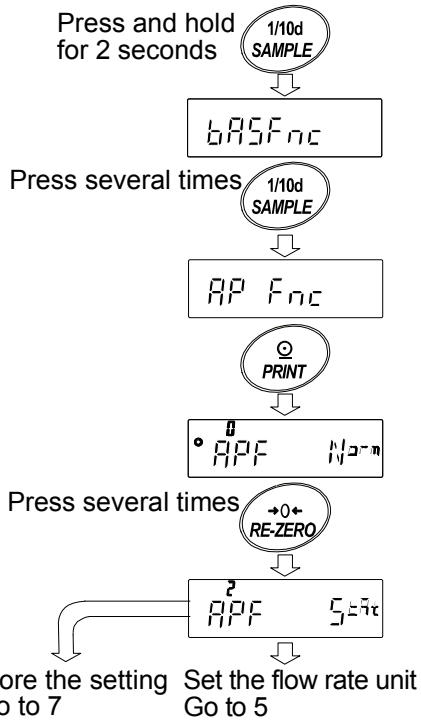

Selecting the statistical items to output

Continue from Step 4

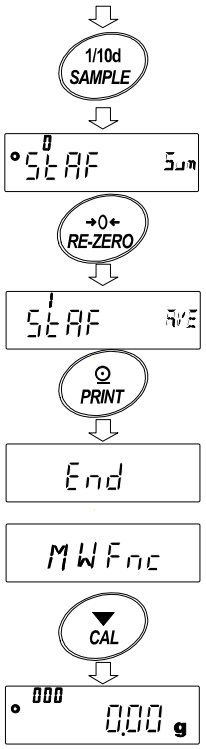

5. Press the [SAMPLE] key to display .

6. Press the [RE-ZERO] key to select the output items.
   In the example, output the number of data, sum, maximum, minimum, range (maximum - minimum) and average are selected.

Parameter	Description
▪ 0	Number of data, sum
1	Number of data, sum Maximum, minimum, range (maximum – minimum), average
2	Number of data, sum Maximum, minimum, range (maximum – minimum), average, Standard deviation, coefficient of variation
3	Number of data, sum Maximum, minimum, range (maximum – minimum), average, Standard deviation, coefficient of variation Relative error of maximum value, relative error of minimum value

7. Press the [PRINT] key to store the setting.
8. Press the [CAL] key to return to the weighing mode.

Selecting the unit

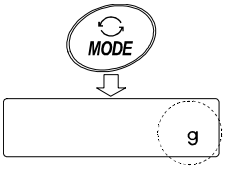

9. Press the [MODE] key to select the unit to be used for the statistical calculation mode. In the example shown at the right, gram (g) is selected.

Note

Selecting the unit using the [MODE] key is not available after the data is entered. In this case, clear the data as described on page 90 "Cleaning the statistical data" and select the unit using the [MODE] key.

When the unit used for the statistical calculation mode is to be enabled upon power-on, select the unit in “Unit (Unit)” of the function table beforehand.

Entering data for statistical calculation

Use the following keys to operate the statistical calculation mode.

[MODE] key ····· When the data is entered, moves between the displaying items (weighing mode, statistical results and data operation) each time the key is pressed.
When no data has been entered, selects the unit.

[SAMPLE] key ..... Turns the readability digit ON or OFF in the weighing mode.

[RE-ZERO] key ····· Sets the display to zero in the weighing mode.

[PRINT] key ..... Outputs the data number and the weight data and includes the weight data to statistical calculation in the weighing mode. (Output is not in the data format specified in the function table because of the data number added.)
Outputs the statistical results while the statistical results are displayed. (Output is not in the data format specified in the function table.)

[CAL] key ····· Returns to the weighing mode.

1. Press the [RE-ZERO] key to set the display to zero.

2. Place the sample on the weighing pan and wait for the stabilization indicator to turn on.

3. Press the [PRINT] key to add the data displayed to statistical calculation. The number of data on the upper left of the display increases by 1.

4. Repeat steps 1 to 3 for each weighing.

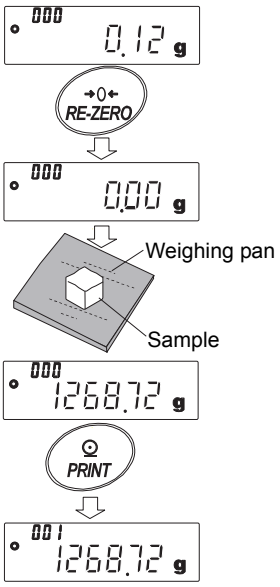

Outputting the statistical results

1. Each time the [MODE] key is pressed, the display changes: the results as selected in "Statistical function mode output items (STAT)", and [CLEAR], [CANCEL].
   When pressing the [SAMPLE] key, the previous item is displayed.

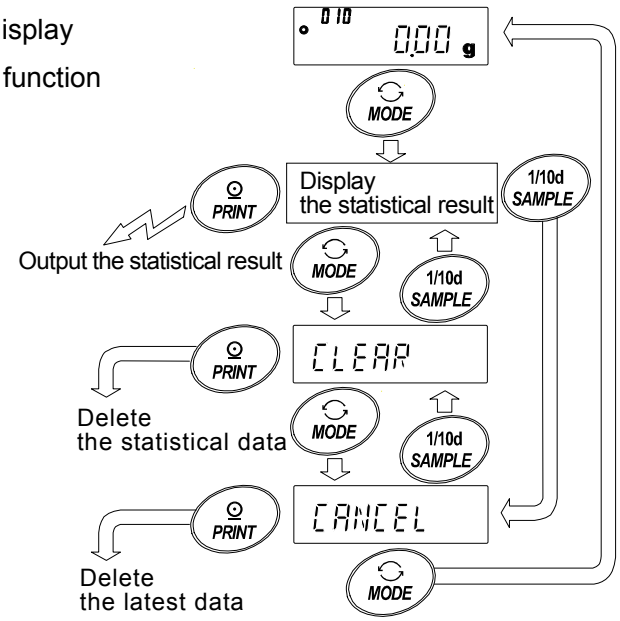

Note

- ☐ When the number of data is 1, the coefficient of variation is displayed as [- - - - - - -].
- ☐ When the average is 0, the coefficient of variation is displayed as [- - - - - - -].
- ☐ Statistical items are indicated on the upper left of the display using the following symbols.

2. When pressing the [PRINT] key while displaying the statistical result, the statistical result is output.

Symbol	Statistical item
SUM	Sum
MAX	Maximum
MIN	Minimum
r	Range (Maximum – minimum)
AVE	Average
Sd	Standard deviation
CV	Coefficient of variation
MAX%	Relative error of maximum value
MIN%	Relative error of minimum value

Output example

Function table parameter (STAT)

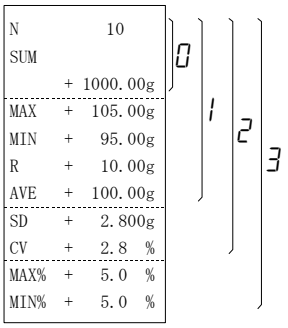

Deleting the latest data

When the wrong data is entered, it can be deleted and excluded from statistical calculation. Only the latest data can be deleted.

1. In the weighing mode, press the [MODE] key to display [CANCEL].
2. Press the [PRINT] key to display [CANCEL No].
3. Press the [RE-ZERO] key to display [CANCEL Go].
4. Press the [PRINT] key to delete the latest data and exclude it from statistical calculation.
   The number of data decreases by 1 when the balance returns to the weighing mode.

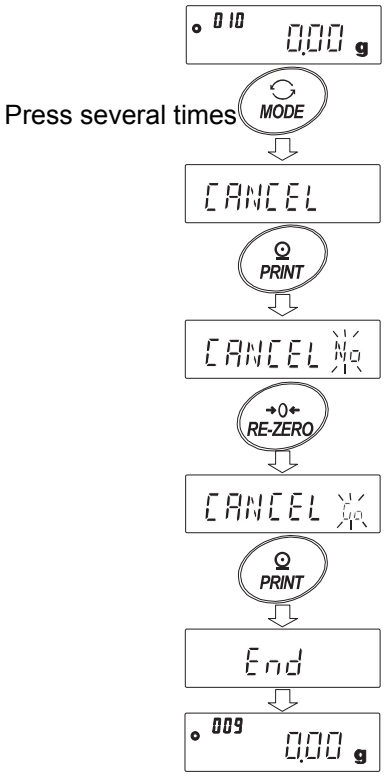

Clearing the statistical data

All the statistical data will be deleted and the number of data will be 0 (zero).

1. In the weighing mode, press the [MODE] key.
2. The statistical data is displayed. Press the [MODE] key several times to display [CLEAR].
3. Press the [PRINT] key to display [CLEAR No].
4. Press the [RE-ZERO] key to display [CLEAR Go].
5. Press the [PRINT] key to initialize the statistical data. The data count becomes 0 (zero) when the balance returns to the weighing mode.

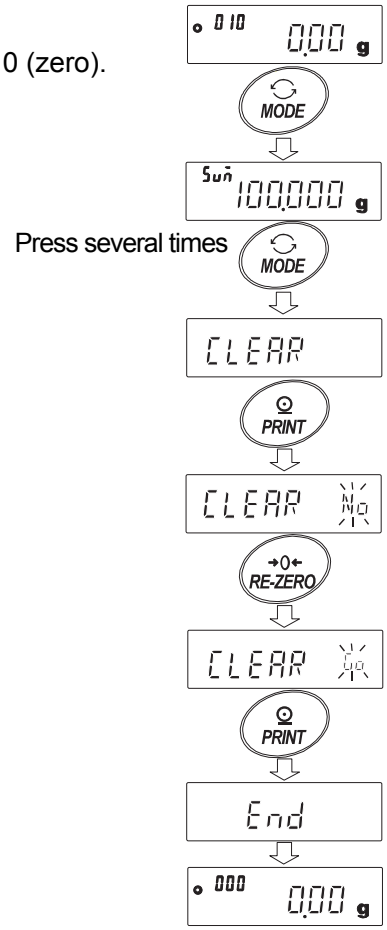

12-2 Statistical Calculation Mode (Example Of Use)

Here, as an example of use of the statistical calculation mode, mixing of the multiple formula such as medicine is described. The mixing process is recorded using the balance and the printer.
In the example, the GX-303A and the AD-8127 are connected using the RS-232C serial interface.

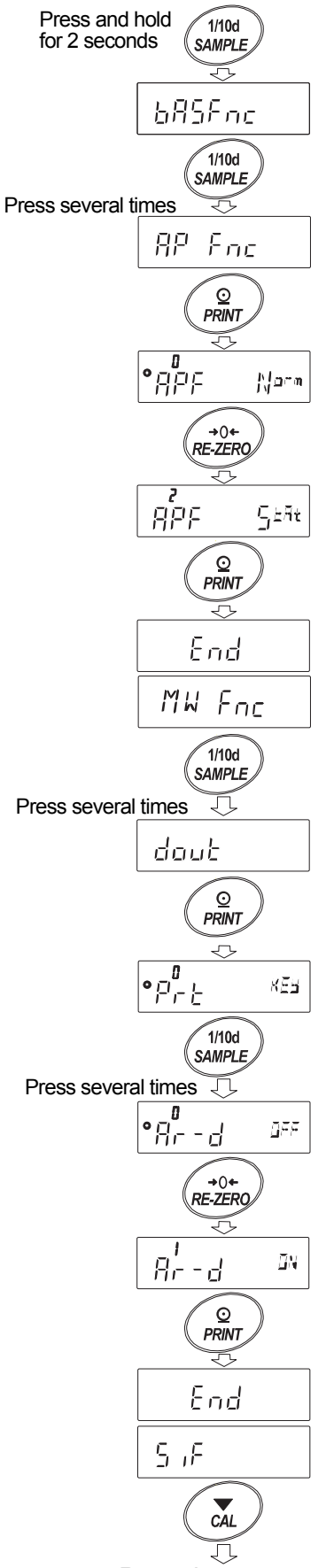

Changing the function table

Changes □ To enable the statistical calculation mode

□ To enable "Zero after output"

Enabling the statistical calculation mode

1. Enter the function table menu.
   Press and hold the SAMPLE key for 2 seconds until bASFnc of the function table is displayed, then release the key.

2. Select the application function.
   Press the SAMPLE key several times to display AP Fnc.
   Then, press the PRINT key to display APF Norm.

3. Change the application function parameter to "2".
   Press the RE-ZERO key to display APF SEt.
   Press the PRINT key to confirm the change.
   After End, MW Fnc is displayed.

Enabling "Zero after output"

4. Select "Zero after output".
   Press the SAMPLE key several times to display dout.
   Then, press the PRINT key to display Prt KEY,
   and press the SAMPLE key several times to display Ar-d OFF.

5. Enable "Zero after output".
   Press the RE-ZERO key to display Ar-d ON. Then, press the PRINT key to confirm the change.
   After End, S.F is displayed.

Returning to the weighing mode

6. Press the CAL key to return to the weighing mode.

Using The Statistical Calculation Mode

1. Press the [RE-ZERO] key to set the display to zero.
2. Place a container on the weighing pan.
   Press the [PRINT] key to cancel the weight (tare). The balance displays [0.000 g]. (Storing the tare value)
   The tare value data is output when the peripheral output equipment is connected.
3. Weigh formula 1 and press the [PRINT] key. The balance displays [0.000 g]. (Storing the weight value of formula 1)
   The weight value data is output when the peripheral output equipment is connected.
4. Weigh formula 2 and press the [PRINT] key.
   The balance displays [0.000 g]. (Storing the weight value of formula 2)
   The weight value data is output when the peripheral output equipment is connected.
5. When there are some more formula to be added, repeat step 4.
6. After mixing is complete, press the [MODE] key to display the statistical results.
7. Press the [PRINT] key to output the number of data saved including the tare value and the total weight.

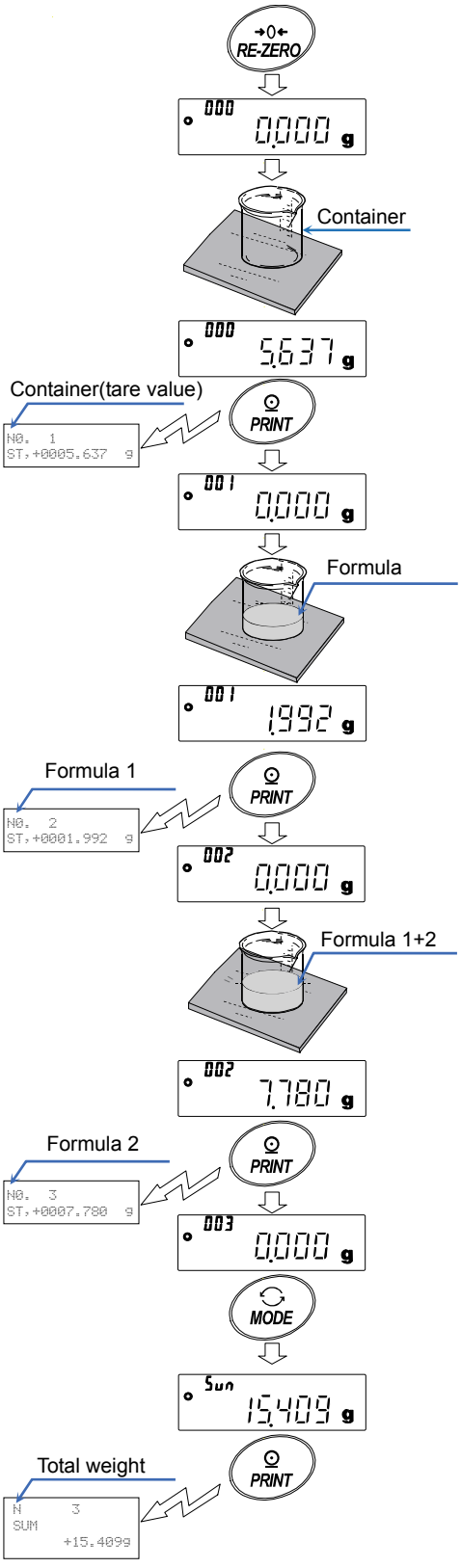

Output example

```
No.  1
ST,+0005.637  g
No.  2
ST,+0001.992  g
No.  3
ST,+0007.780  g

N      3
SUM
     +15.409  g
```

Tare value

Formula 1

Formula 2

Total weight

13.Flow Measurement

The balance has a "flow mode" that calculates the amount of change in the weighing value per hour. For details, please refer to "FRD Addendum" which can be downloaded from the A&D website (https://www.aandd.jp).

- ☐ If the flow unit is set to mL/*, density can be registered. The maximum number of registrations is 10, and if density is set in advance, it can be selected according to the measurement sample.
- ☐ The flow rate value is calculated by the following formula.

$$Q = \frac{W - W'}{Ct}$$

Q : Flow rate　　Ct : Calculation time
W : Current calculated value　　W' : Weight value before Ct

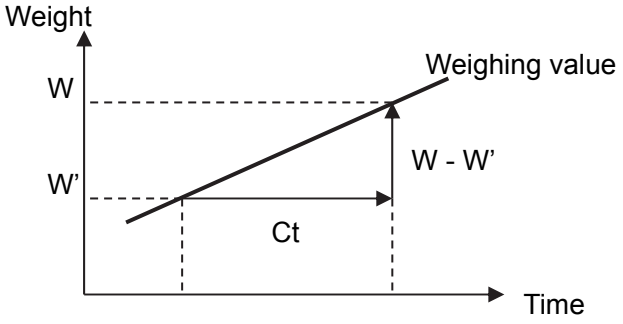

For flow rate calculation time Ct, select manual / automatic and set.

13-1 How To Use Flow Measurement

Enable flow rate measurement

Switch flow rate measurement (Change the Function Table)

1. Press and hold the [SAMPLE] key for 2 seconds until [bASFnc] of the function table is displayed, then release the key.
2. Press the [SAMPLE] key several times to display [AP Fnc].
3. Press the [PRINT] key to display [° APF Norm].
4. Press the [RE-ZERO] key several times to display [° APF Frd].

   If you want to change the flow rate unit, go to 5.

   If you want store the setting, go to 7.

   If you want to cancel the flow function, press the [RE-ZERO] key and return to [° APF Norm].

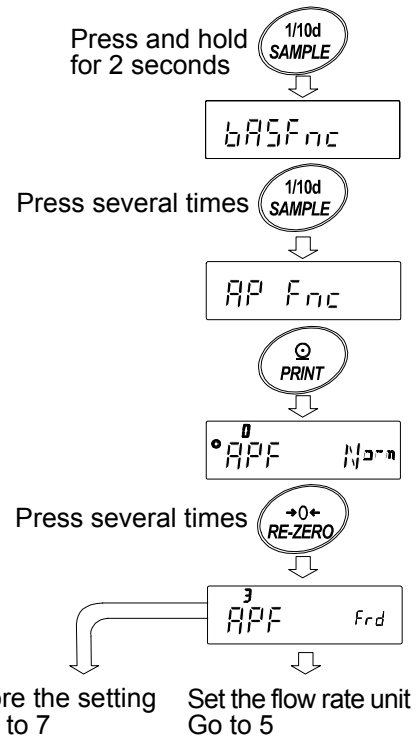

Setting of flow rate unit

5. Press the [SAMPLE] key to display [° Frd Unit].
6. Press the [RE-ZERO] key to set the setting value.

Parameter	Contents
■ 0	g / s (gram/second)
1	g / m (gram/minute)
2	g / h (gram/hour)
3	mL / s (milliliter/second)
4	mL / m (milliliter/minute)
5	mL / h (milliliter/hour)

7. Press the [PRINT] key to store.
8. Press the [CAL] key to return to the calculating display.

■ Factory setting

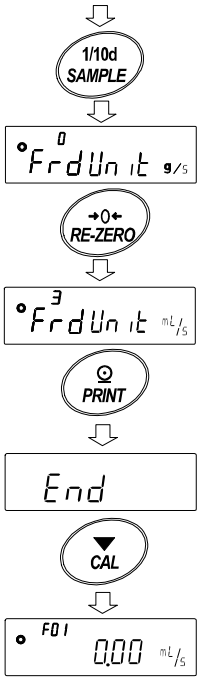

Manual / automatic selection of flow calculation time Ct.

There are two ways to set flow calculation time Ct, either by automatic setting in the balance according to the flow rate value or by manually determining a fixed value.
To switch between manual and automatic, please perform the following operation.
In factory setting, flow calculation time Ct is set to manual input setting (Ct AUto "OFF") .

From setting of flow rate unit

1. Please perform the following operation from the [°Frd Unit mL/s] display for flow unit setting as shown in "13-1 How To Use Flow Measurement".
2. Press the [SAMPLE] key to display [° Ct AUto].
3. Press the [RE-ZERO] key to change ON/OFF.
4. Press the [PRINT] key to store.
5. Press the [CAL] key to return to the calculation display.

* If set to "OFF", refer to "How to set calculation time by manual setting" to set the flow calculation time.
If set to "ON", refer to "How to set calculation time by automatic setting" to set the flow calculation time.

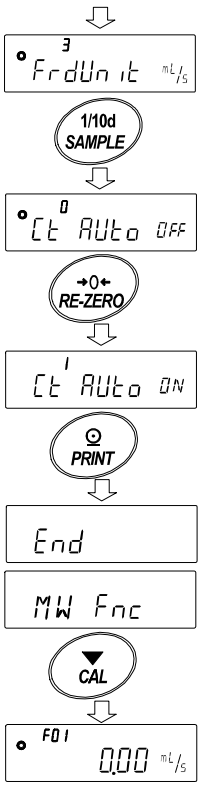

How to set flow calculation time by manual setting

The flow calculation time Ct can be set by the following procedure.

1. In weighing display, press and hold the [MODE] key for 2 seconds to display [Ct 2 SEC].
2. Calculation time can be changed by following key operation.
   The setting range is 1 second to 1 hour.
   [RE-ZERO] (+) key ·· Change calculation time
   [MODE] (-) key ···· Change calculation time
   [PRINT] key ····· Store setting value
   If the flow rate unit is g / *,
   the display will return to weighing display.
   When the flow rate unit is mL / *,
   the display goes to density setting display.
   [CAL] key ····· It returns to weighing display without storing the set value.

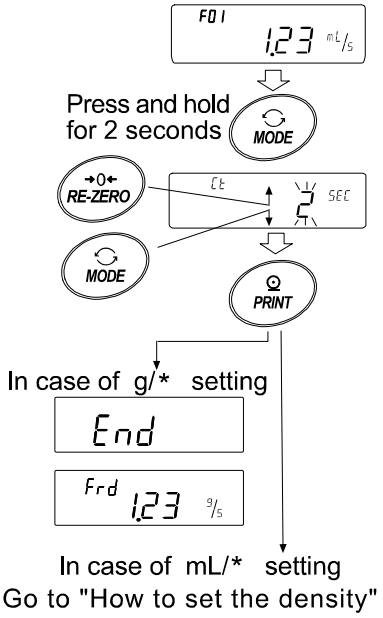

Note Unit of time setting (second(s), minute(m) or hour(h)) is entered in " * " of "g/*" and "mL/*".
For setting target values, refer to "GX-A/GF-A Series Flow Measurement Function Supplementary Manual".

How to set flow calculation time by automatic setting

It is possible to perform flow measurement without going to the trouble of selecting the flow rate calculation time Ct that matches the flow rate from the setting value.

The flow calculation time Ct is decided according to the flow rate value measured in 1 to 60 seconds. Accuracy can be selected from "Precision Priority (Resolution 500)", "Standard Setting (Resolution 200)" and "Response Priority (Resolution 50)".

The flow rate calculation precision can be changed by the following procedure.

1. Press and hold [MODE] key for 2 seconds to display [Fr RES] during weighing display.
2. Press the [RE-ZERO] key to change the desired setting value.

Parameter	Description
0	Precision priority (Resolution 500)
■ 1	Standard Setting (Resolution 200)
2	Response Priority (Resolution 50)

■ Factory setting

3. Press the [PRINT] key to store.
   If the flow rate unit is g / *, the display returns to weighing display or flow display.
   If the flow rate unit is mL / *, the display transitions to density setting.
   Please refer to "How to set the density".

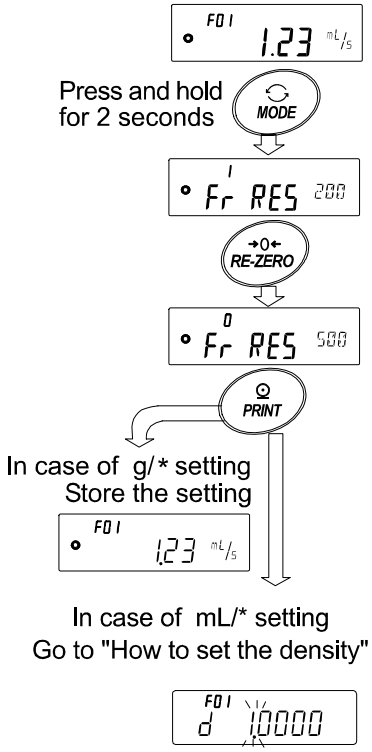

Note Unit of time setting (second (s), minute (m) or hour (h)) is entered in " * " of "g/*" and "mL/*".

How to set the density

From the Flow calculation time or Flow calculation precision

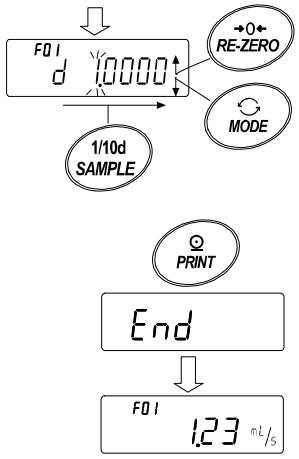

When the setting value of function setting [Frd Unit] is 3, 4, 5, after setting the calculation time, go to density setting display.
Density can be changed by following key operation.
The setting range is 0.0001g/cm^3 to 9.9999g/cm^3.

[RE-ZERO](+) key ····· Change the number of the blinking digit
[MODE](-) key ····· Change the number of the blinking digit
[SAMPLE] key ····· Move the blinking digit
[PRINT] key ····· The set value is the display returns to weighing display.
[CAL] key ····· The display returns to weighing display without storing the set value.

Method of reading density number

When flow unit is mL/*, up to 10 densities can be registered.
To register a new density, read the unconfigured density number and then register according to the procedure of the setting method of calculation time.

Continuing to hold down the [PRINT] key for 2 seconds in weighing display to display [d*.****].
Blinking [F**] is the current density number and [d*.****] is the set density value.
The density number can be changed by following key operation.
The setting range is F01 to F10.

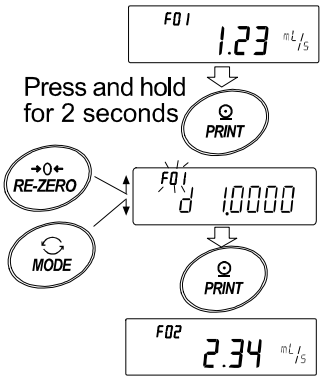

Note

F** : The selected density number is entered.
d*.**** : The set density number is entered.

[RE-ZERO](+) key ···· Change density number.
[MODE](-) key ····· Change density number.
[PRINT] key ····· Read the density of the selected density number and return to weighing display.
[CAL] key ····· Return to the weighing display without reading the density of the selected density number.

Change display

After returning to the weighing value display after setting to flow mode, the unit is "g" with the [Frd] or [F**] indicator on.
Use the [MODE] key to switch between flow rate display and "g" display. By switching, the total amount and flow rate can be checked.

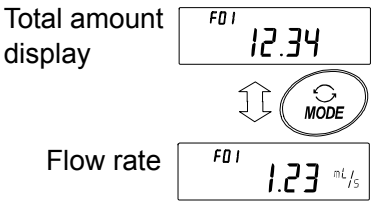

Note

F** : The selected density number is entered. (F01 to F10)

14.Gross Net Tare Function

Zero setting and taring can be operated separately, and data output for Gross (total amount), Net (net amount), Tare (tare quantity) becomes possible.

When the gross net tare function is selected, the key operation is changed as follows.

Key	Operation
ON:OFF key	Zero setting（Operate as the ZERO key)
RE-ZERO key	Tare（Operate as the TARE key）

In order to use the Gross Net Tare Function, it is necessary to change the "setting of the Function table".

14-1 Preparation Of Gross Net Tare Function

To use this function, enter the Function table as follow, and set "Application Function APFnc" to "4" in "Application mode APF". To return the normal weighing mode (Factory setting), set " Application mode APF" to "0".

Please set as follows.

Setting procedure

1. Press and hold the SAMPLE key for 2 seconds until bASFnc of the function table is displayed, then release the key.
2. Press the SAMPLE key several times to display APFnc.
3. Press the PRINT key to display APF 0 Norm.
4. Press the RE-ZERO key several times to display APF 4 GNT.
5. Press the PRINT key to store the setting.
6. Press the CAL key to return to the calculating display.

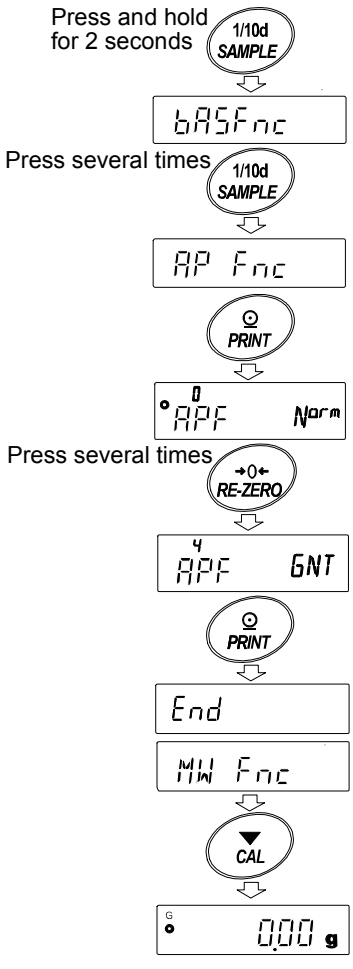

Key operation

In case of weighing value (gross) setting, operate with the following keys.

Key	Function	Weighing value（gross）	Operation
I/⏻ ON:OFF	Zero setting （ZERO）	Within the zero range *1	Update a zero point and clear a tare value.
		Out of the zero range *1	Do nothing
→0← RE-ZERO	TARE	Plus value	Do tare and update a tare value
		Gross zero *2 （Gross zero mark blinking）	Clear a tare value
		Minus value	Do nothing

*1 "Zero range" means the range where the load is within ± 2% of the weight from the reference zero. For the zero range for each model, refer to "4-2 Basic Operation".

*2 "Gross zero" means the range where the readability of gross (total amount) is zero in "g". (The state in which the gross zero mark is lit.)

Note To turn off the display of balance's display, press the ON:OFF key (Long press) for about 2 seconds.

Display

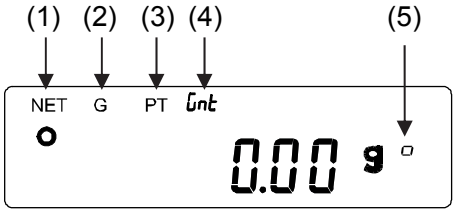

No.	Mark	Description
(1)	NET	This lights when the tare is not zero.
(2)	G	This lights when the tare is zero.
(3)	PT	When the preset tare is set by the PT command, this lights together with the NET mark.
(4)	GNT	This lights while using the gross net tare function. * Does not light with balance software version 1.300 or later. (When gross net tare function is in use, the NET or G mark lights always)
(5)	◻	This lights when the readability of the gross is in the range of zero in "g".

Output

1. Every time pressing the [PRINT] key, it will output in the order of "NET" (object), "GROSS" (total amount), "TARE" (tare).
2. The compatible output format depends on the software version of the balance.

Software version of the balance	Adaptive format
1.200 or later	A&D basic format DP format CSV format

Output example (A&D standard format)

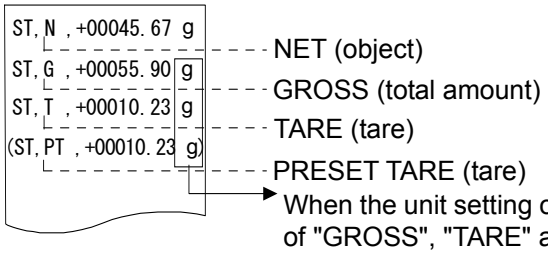

When the unit setting of the balance is PCS or %, the unit output of "GROSS", "TARE" and "PRESET TARE" become "g" unit.

☐ By using the "UFC function", output connection and order also can be set.
For the "UFC function", please refer to "Communication manual" which can be downloaded from the A&D website (https://www.aandd.jp).

14-2 Example Of Using The Gross Net Tare Function

1. After setting the gross net tare function, press the [ON:OFF] key when nothing is on the weighing pan. "G" will be displayed on the display.
2. Place the container to be tared on the weighing pan.
3. Press the [RE-ZERO] key to display [NET 0.00 g], the tare value is set (updated). "NET" is displayed on the display.
4. Place the object.
5. Press the [PRINT] key, it will output in the order of "NET" (object), "GROSS" (total amount), "TARE" (tare).
6. Remove anything on the weighing pan and press the [ON:OFF] key to return to the "1".
   To continue weighing without changing the tare value, remove the object only, place the next weighing object and press the [PRINT] key to continue outputting.

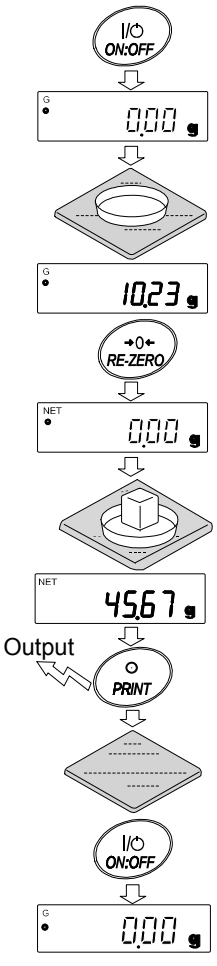

15. Minimum Weighing Warning Function

The minimum weighing value is the minimum necessary amount of sample to be used for correctly performing quantitatively performing quantitative analysis, taking into consideration measurement error of the balance.

If the amount of sample is too small, the proportion of the measurement error in the measured value increases accordingly, and the reliability of the analysis result may drop.

By using the minimum weighing warning function, it is possible to judge at a glance whether the amount of sample meets the set minimum weight value. This function can be used only in "g" mode.

" MIN " is displayed at the top of the unit part when in use when the amount of sample is less than the set minimum weighing value, the " MIN " indication flashes.

When the amount of sample reaches the minimum weighing value or more, the " MIN " indicator will turn off.

The minimum weighing value can be changed from the function setting. The factory setting is 0 g.

If the set value is 0 g, no warning will be displayed even if the minimum weighing warning function is ON (MW-CP 1 or 2). Also, a value greater than weighing capacity cannot be set as minimum weighing value.

There are two kinds of warning display as follows

"Excluding near zero" MW1-CP EXC

"Including near zero" MW2-CP INC

Near zero is within ± 10 digits of 0 g.

Note

- ☐ If MW-CP is set to anything other than U, the MODE key will be applied to set the minimum weighing value and units cannot be changed with the MODE key. (The latest unit will be fixed)
- ☐ To change the unit, turn OFF the minimum weighing value warning function.
- ☐ To turn OFF the minimum weighing value warning function, set MW-CP to MW0-CP OFF, referring to "15-1 Minimum Weighing Comparison".

15-1 Minimum Weighing Comparison

1. Hold down the [SAMPLE] key to display the function setting [bASFnc].
2. Press the [SAMPLE] key several times to display [MW Fnc].
3. Press the [PRINT] key.
4. [MW-CP] will be displayed. Press the [RE-ZERO] key to change the display from [MW⁰-CP OFF] to [MW¹-CP END] (excluding near zero) or [MW²-CP INB] (including near zero).
5. If changing the setting of the minimum weighing value, proceed to 6. If not changing, press the [CAL] key to return to the weighing display.
6. Press the [SAMPLE] key to display [MW].
   (Make sure to check your balance software version and set the minimum weighing value.)

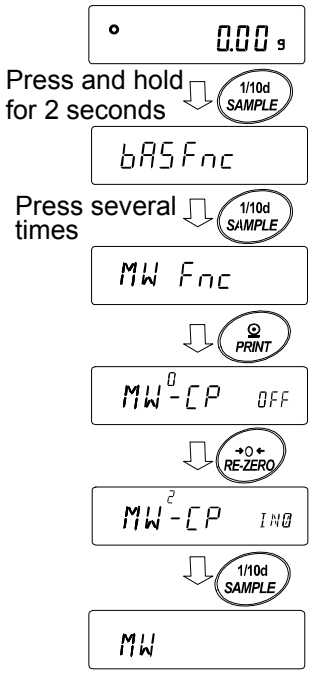

15-2 Input And Output Of The Minimum Weighing Value

15-2-1 Setting From The Function Setting (The Balance Software Version 1.200 To 1.220)

Input a minimum weighing value directly

Continues from step 6 of "15-1 Minimum Weighing Comparison".

7. When [MW] is displayed, press the [PRINT] key.
8. Set the minimum weighing value. The minimum weighing value can be changed by the following key operation.
   - [RE-ZERO] (+) key ··· Change the value of the blinking digit.
   - [MODE] (-) key ····· Change the value of the blinking digit.
   - [SAMPLE] key ····· Move the blinking digit.
   - [PRINT] key ····· Store the set value and proceed to the next item.
   - [CAL] key ····· Advance to the next item without storing the setting value.
9. Press the [PRINT] key to proceed to the next item.
10. Press the [CAL] key to return to the weighing display.

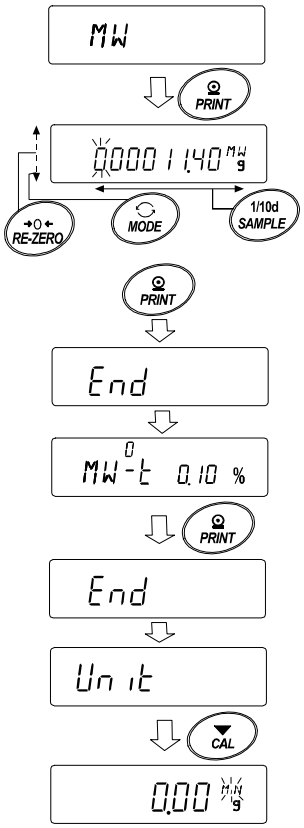

15-2-2 Setting From The Weighing Display (Balance Software Version 1.200 To 1.220)

1. Press the [MODE] key in the weighing display.
2. The current setting minimum weighing value blinks.
3. Press the [PRINT] key.
4. Set the minimum weighing value.
   The minimum weighing value can be changed by the following key operation.

   [RE-ZERO](+) key ··· Change the value of the blinking digit.
   [MODE](-) key····· Change the value of the blinking digit.
   [SAMPLE] key ····· Move the blinking digit.
   [PRINT] key ····· Store the set value and proceed to the next item.
   [CAL] key ····· Advance to the next item without storing the setting value.

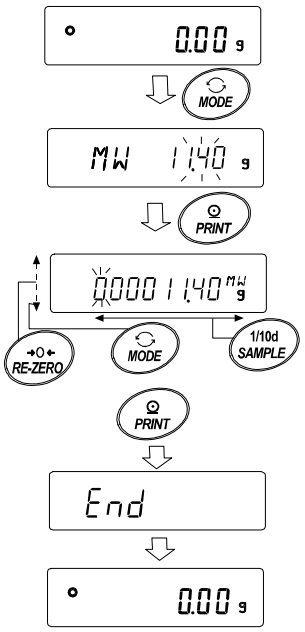

15-2-3 Setting From The Function Setting (Balance Software Version 1.300 Or Later)

[Input a minimum weighing value directly]

Continues from step 6 of "15-1 Minimum Weighing Comparison".

7. When [MW] is displayed, press the [PRINT] key.
8. [KEY in] is displayed.
   When setting a minimum weighing value:
   Press the [PRINT] key again. Proceed to step 9.
   When not setting a minimum weighing value:
   Press the [CAL] key twice. The minimum weighing value will not be input, and the balance will return to weighing mode.
9. Set the minimum weighing value.
   The minimum weighing value can be changed by the following key operation.

   [RE-ZERO](+) key··· Change the value of the blinking digit.
   [MODE](-) key····· Change the value of the blinking digit.
   [SAMPLE] key ····· Move the blinking digit.
   [PRINT] key ····· Store the set value and proceed to the next item.

   □ When MW-CP is set to 0, the parameter is set to 1 automatically and the minimum value weighing comparison function will be available.

   [CAL] key ····· Advance to the next item without storing the setting value.
10. Press the [CAL] key to return to the weighing display.

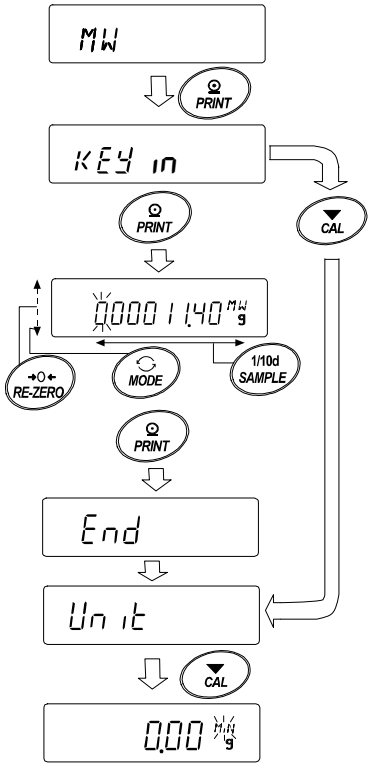

Input with repeatability using external weight

Continues from step 6 of "15-1 Minimum Weighing Comparison".

7. When [MW] is displayed, press the [PRINT] key. [KEY in] is displayed.
8. Press the [SAMPLE] key. [Ext MASS] is displayed.
9. Press the [PRINT] key. [START], [READY], then the weighing display is displayed, and then the first load of repeatability will be requested with [LOAD] displayed.
10. Place the external weight on the balance. Then ◄ (in process mark) lights.
11. After ◄ (in process mark) blinks and the load is stable for 2 seconds, the span is displayed.
12. [REMOVE] blinks.
13. Remove the external weight. Then ◄ (in process mark) lights.
14. After ◄ (in process mark) blinks and the load is stable for s2 seconds, zero is displayed.
15. With [LOAD] displayed, the second load of repeatability will be requested. Subsequently, repeatability measurement will proceed until 10th time.
16. After the 10th span is displayed, [REMOVE], [End], then [MW 0.1% 23.20 g] of the minimum weighing display is displayed.

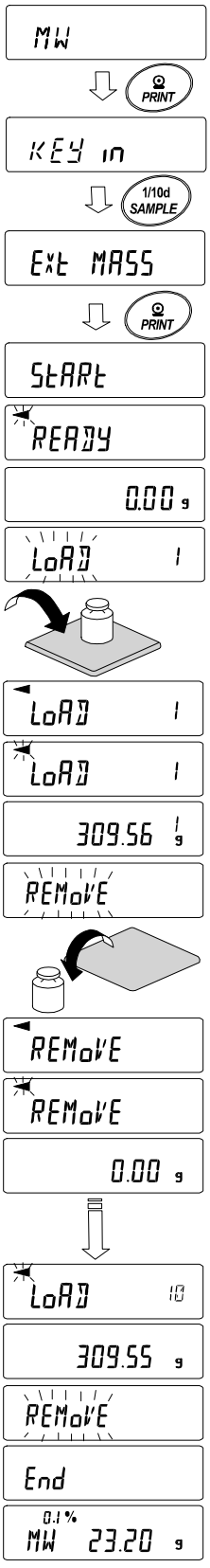

Error display description

[E g]	The weight is too large.
[-E g]	The weight is too small.

□ When the error is cleared, you are returned to repeatability measurement.

[Error 1] When load is unstable for 20 seconds while repeatability is being measured, timeout occurs (more than 2 minutes passed without operations being made).

□ After [Error] is displayed, the repeatability measurement shuts down and the balance will return to the function setting.

17. The repeatability (SD) and the minimum weighing value (MW) can be output. When [MW 0.1% 23.20 g] is displayed, press the [SAMPLE] key to switch between minimum weighing value (MW) and repeatability (SD). Press the [MODE] key to switch the measurement tolerance.

Ex: Batch output of minimum weighing values

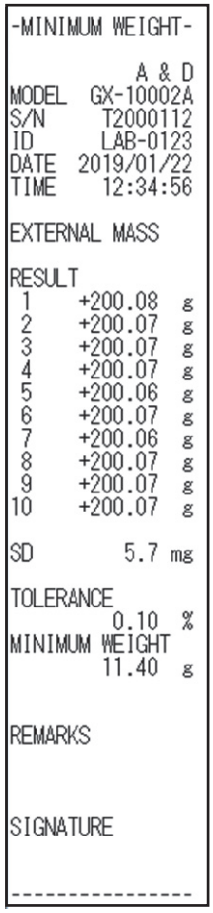

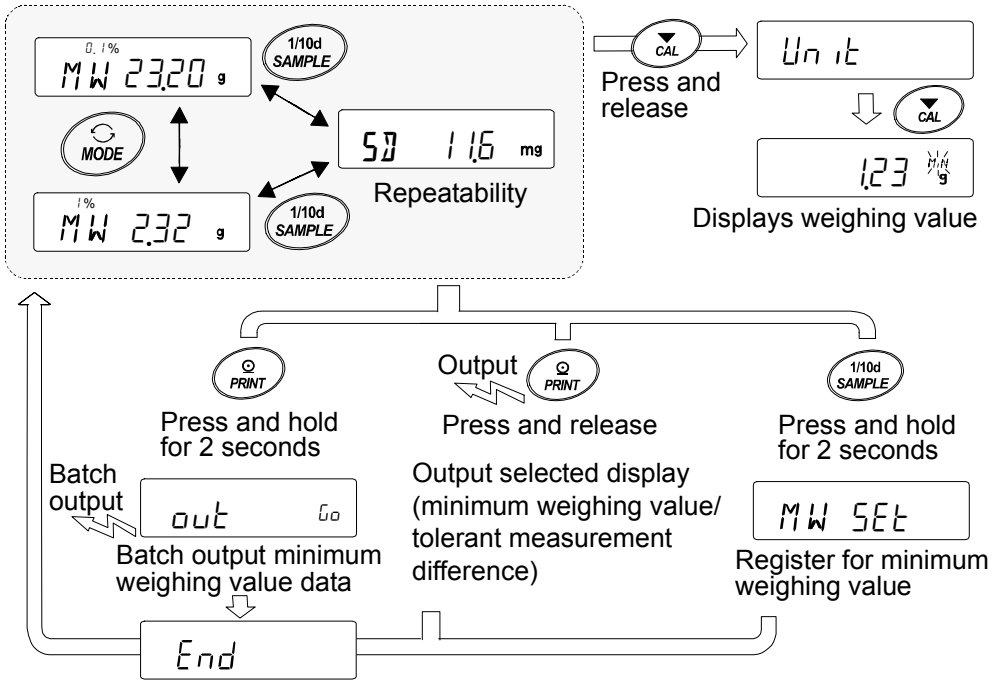

18. Press the [PRINT] key to output the repeatability (SD) and the minimum weighing value (MW) selected at step 17.
    Press and hold the [PRINT] key for 2 seconds to batch output the data.
19. When the output is completed, [MW 23.20 g] is displayed.
20. Press and hold the [SAMPLE] key for 2 seconds. The minimum weighing value is registered and you are returned to [MW 23.20 g].

□ If MW-CP is set to 0, the parameter is automatically set to 1 and the minimum weighing comparison is available.

21. Press the [CAL] key twice to start the minimum weighing warning function by the weighing mode.

15-2-4 Setting From The Weighing Mode (Balance Software Version 1.300 Or Later)

1. Press the [MODE] key in the weighing mode.
2. When [MW 23.20 KEY g] is displayed, press the [PRINT] key.
3. [KEY in] is displayed.
   After this, set the minimum weighing value setting from step 8 of "Input a minimum weighing value directly" or "Input repeatability using external weight" in "15-2-3 Setting From The Function Setting".

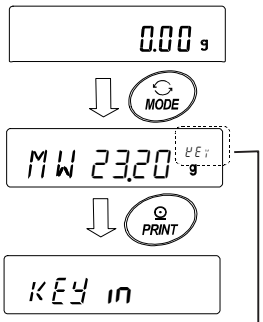

Displays the current set value above the unit

- KEY Input set value.
- ExE Input from repeatability using external weight.
- ECL Input at ECL (press and hold the MODE key).
  Refer to "6-2 Self Check Function / Automatic Setting Of Minimum Weighing Value By ECL".

15-2-5 Batch Output The Minimum Weighing Value (Balance Software Version 1.300 Or Later)

The result of setting the minimum weighing value and repeatability can be batch output.

1. Press the [PRINT] key for 2 seconds while [KEY in] or [ExE MASS] is displayed.
2. With the [REZERO] key, select "No" or "Go" from [out] display. By selecting "Go" and pressing the [PRINT] key, the result is batch output.
3. After the batch output is completed, [End] is displayed, and then the display returns to [KEY in] or [ExE MASS].

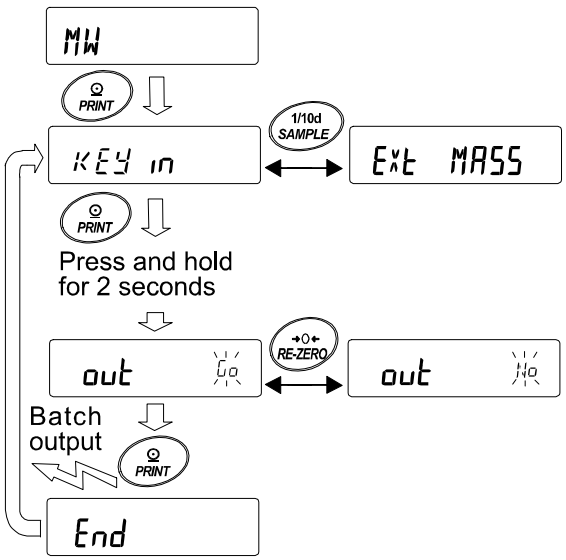

Example: Batch output of the minimum weighing values set

The result depends on the settings.

Input with KEY in

```
-MINIMUM WEIGHT-

              A & D
MODEL    GX-10002A
S/N       T2000112
ID        LAB-0123
DATE    2019/01/22
TIME      12:12:34

KEY INPUT

MINIMUM WEIGHT
          11.40   g


REMARKS



SIGNATURE


----------------
```

Input with EXT MASS

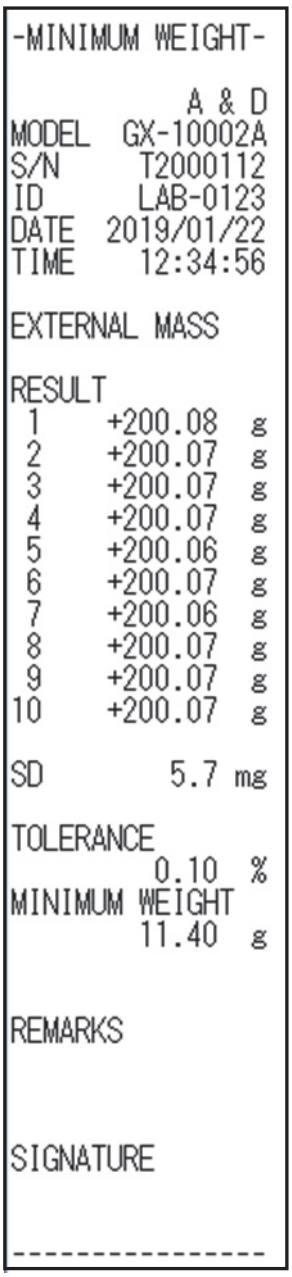

```
-MINIMUM WEIGHT-

              A & D
MODEL    GX-10002A
S/N       T2000112
ID        LAB-0123
DATE    2019/01/22
TIME      12:34:56

EXTERNAL MASS

RESULT
 1      +200.08   g
 2      +200.07   g
 3      +200.07   g
 4      +200.07   g
 5      +200.06   g
 6      +200.07   g
 7      +200.06   g
 8      +200.07   g
 9      +200.07   g
10      +200.07   g

SD           5.7 mg

TOLERANCE
           0.10   %
MINIMUM WEIGHT
          11.40   g


REMARKS



SIGNATURE


----------------
```

Input with ECL

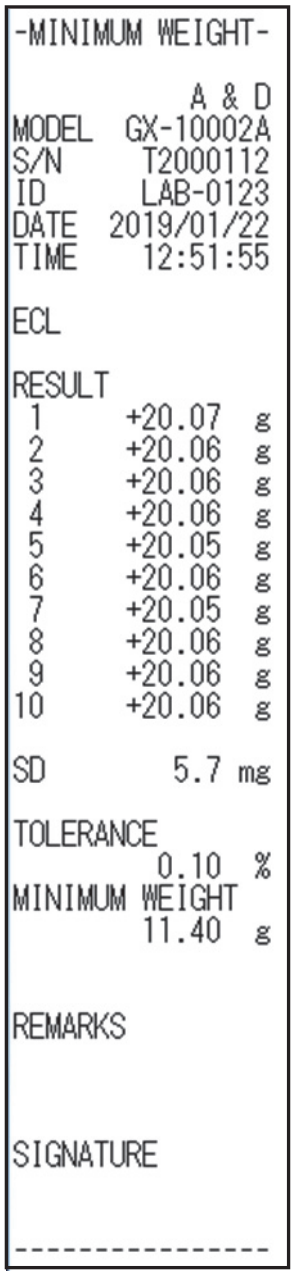

```
-MINIMUM WEIGHT-

              A & D
MODEL    GX-10002A
S/N       T2000112
ID        LAB-0123
DATE    2019/01/22
TIME      12:51:55

ECL

RESULT
 1      +20.07   g
 2      +20.06   g
 3      +20.06   g
 4      +20.06   g
 5      +20.05   g
 6      +20.06   g
 7      +20.05   g
 8      +20.06   g
 9      +20.06   g
10      +20.06   g

SD           5.7 mg

TOLERANCE
           0.10   %
MINIMUM WEIGHT
          11.40   g


REMARKS



SIGNATURE


----------------
```

15-3 Setting Measurement Tolerance Of Minimum Weighing Value

With the setting for Function Table MW-t, you can select the measurement tolerance of the minimum measured value (reference value) calculated from repeatability measurement by electronic control load (ECL). This function can be used for balance software version 1.200 to 1.220.

For balance software version 1.300 or later, please refer to "Input repeatability using external weight" in "15-2 Input And Output Of The Minimum Weighing Value" or "6-2 Self Check Function / Automatic Setting Of Minimum Weighing Value By ECL" for the setting.

Setting procedure

1. Press and hold the [SAMPLE] key for 2 seconds to display the function setting [bASFnc].
2. Press the [SAMPLE] key several times to display [MW Fnc].
3. Press the [PRINT] key.
4. Press the [SAMPLE] key several times to display [MW-t].
5. Press the [RE-ZERO] key to select [MW-t 0.10 %] (Standard deviation SDx2000 times) or [MW-t 1 %] (Standard deviation SDx200 times)
6. Press the [PRINT] key to move to the next item.
7. Press the [CAL] key to return to the weighing display.
8. For the repeatability measurement with setting value being by electronic control load (ECL), refer to "6-2 Self Check Function / Automatic Setting Of Minimum Weighing Value By ECL".

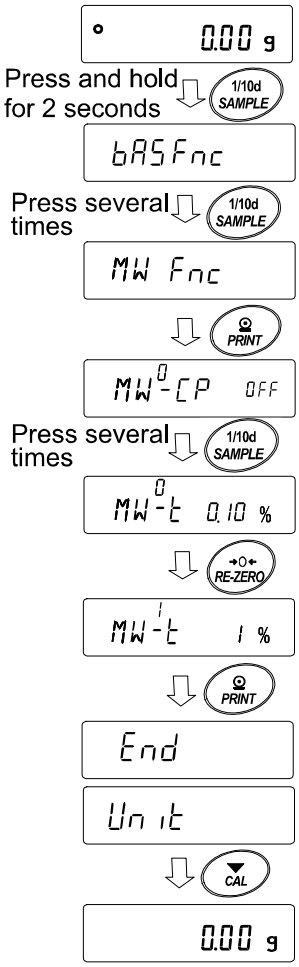

15-4 Data Output When Less Than Minimum Weighing Value

Data output ON/OFF can be switched with the setting for Function Table Min out when less than the minimum weighing value.
This function is available for balance software version 1.200 or later.

Setting procedure

1. Press and hold the [SAMPLE] key for 2 seconds to display the function setting [bASFnc].
2. Press the [SAMPLE] key several times to display [MW Fnc].
3. Press the [PRINT] key.
4. Press the [SAMPLE] key several times to display [Min out].
5. Press the [RE-ZERO] key to select [Min out ON] (Data output ON) or [Min out OFF] (Data output OFF)
6. Press the [PRINT] key to move to the next item.
7. Press the [CAL] key to return to the weighing display.

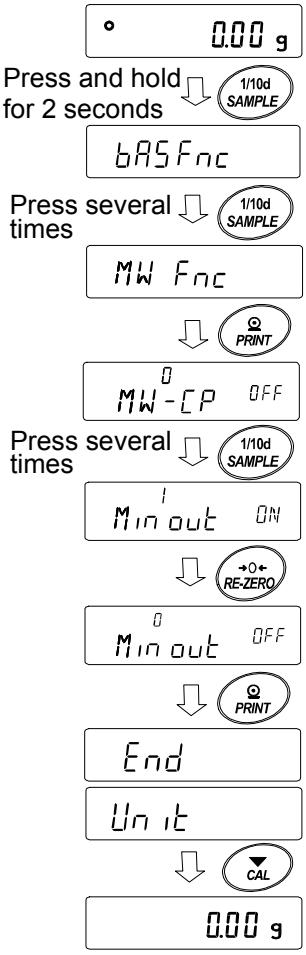

16.Underhook

The underhook can be used for magnetic materials or density measurement. The built-in underhook is revealed by removing the plastic cap on the bottom of the balance.
Use the underhook as shown below.

Caution

- ☐ Do not apply excessive force to the underhook.
- ☐ When not in use, do not open the cover to prevent dust from getting into the balance.
- ☐ Do not push the underhook upward.

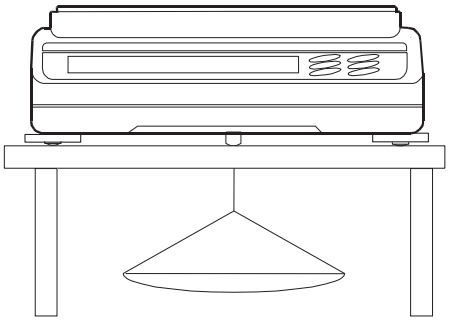

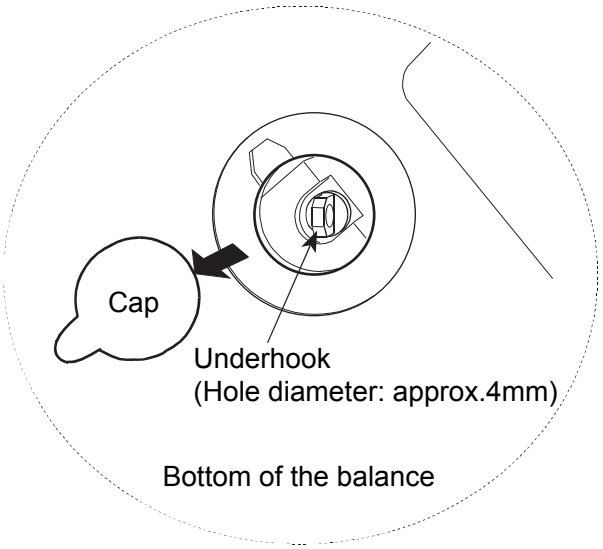

- ☐ The weighing pan, pan support and draft gate fall off, when turning over the balance. Remove them first.
- ☐ When not in use, attach the plastic cap to prevent dust from getting into the balance.

17. Programmable-Unit

This is a programmable unit conversion function. It multiplies the weighing data in grams by an arbitrary coefficient set in the function table and displays the result.
The coefficient must be within the range between the minimum and maximum shown below. The setting of coefficient differs according to the balance software version. If the coefficient set is beyond the range, an error is displayed and the balance returns to the coefficient setting mode, prompting to enter an appropriate value. A coefficient of 1 was set at the factory.

Balance software version 1.200 to 1.220

Model	Minimum coefficient	Maximum coefficient
GF-123A GX/GF-203A/303A/403A/603A/1003A/1603A	0. 01	1000
GF-1202A GX/GF-2002A/3002A/4002A/6002A/10002A		100
GX/GF-6001A/10001A		10

Balance software version 1.300 or later

Model	Minimum coefficient	Maximum coefficient
GX-124AE/224AE/324AE GX/GF-124A/224A/324A	0. 000001	10000
GF-123A GX/GF-203A/303A/403A/603A/1003A/1603A		1000
GF-1202A GX/GF-2002A/3002A/4002A/6002A/10002A		100
GX/GF-6001A/10001A		10

Operation

1. Press and hold the [SAMPLE] key until [bASFnc] of the function table is displayed.
2. Press the [SAMPLE] key several times to display [MLt].
3. Press the [PRINT] key. The balance enters the mode to confirm or set the coefficient.

Confirming the coefficient

4. The current coefficient is displayed with the first digit blinking.
   ☐ When it is not to be changed, press the [CAL] key and proceed to step 6.
   ☐ When it is to be changed, press the [RE-ZERO] key and proceed to step 5.

Setting the coefficient

5. Set the coefficient using the following keys.

   [SAMPLE] key ····· To select a digit to change the value. The selected digit blinks.

   [RE-ZERO] key ····· To change the value.

   [MODE] key ····· To change the decimal point position.
   Each time the switch is pressed, the decimal point position changes as follows:

   0.000001 ⟶ 00.00001 ⟶ ... ⟶ 000000.1 ⟶ 0000001

   [PRINT] key ····· To store the new setting, display [End] and go to step 6.

   [CAL] key ····· To cancel the new setting and go to step 6.

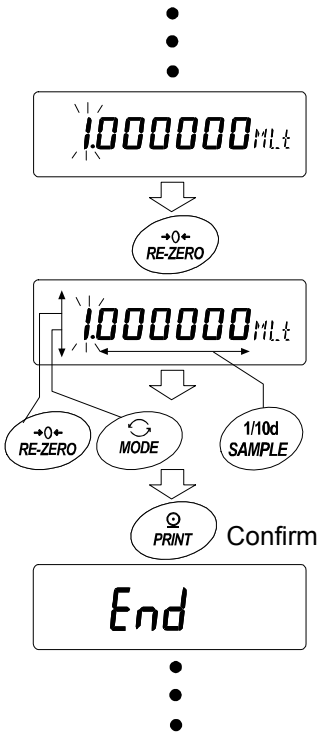

Quitting the operation

6. The balance displays [Unit]. Press the [CAL] key to exit the programmable-unit function and return to the weighing mode.

Using the function

Press the [MODE] key to select the programmable-unit (no display on the unit section). Perform weighing as described in “4-2 Basic Operation (Gram Mode)”. After weighing, the balance displays the result (weighing data in grams x coefficient).

18.Density (Specific Gravity) Measurement

The balance is equipped with a density mode. It calculates the density of a solid using the mass value of a sample in air and the mass value in liquid.

For measurement, it use of the option GXA-13 specific gravity measurement kit is recommended.

Note

☐ The density mode was not selected for use when the balance was shipped from the factory. To use the mode, change the function table and activate the density mode "dS". Please refer to "Storing Units" of "4-1 Units".

☐ Readability is fixed when in density mode.

Formula to obtain the density

1. Density of solid

   It can be obtained from the weight of the sample in air, the weight in the liquid, and the density of the liquid.

   $\rho = \frac{A}{A-B} \times \rho_0$

   ρ : Density of a sample A: Mass value of a sample in air

   ρ_0 : Density of a liquid B: Mass value of a sample in liquid

2. Density of liquid

   Weight in air, weight in liquid and volume of float can be obtained using a float of a known.

   $\rho = \frac{A-B}{V}$

   ρ : Density of a sample A: Mass value of a sample in air

   V : Volume of float B: Mass value of a sample in liquid

（1）Prior to measurement: Changing the function table

Prior to measurement, change the function table as follows:

1. Register the density mode.
   Density mode cannot be used at the factory setting.
   Please refer to "Storing Units" of "4-1 Units" and register the gravimeter mode (dS).
   Density mode is selected as one of the units with the MODE key.
2. Select whether the object to be measured is solid or liquid. (Function setting dS Fnc, dS)
3. In the case of solid density measurement, select a method of inputting the density of liquid. (function setting dS Fnc, Ld in)
   Density of liquid can be set by water temperature input or direct input of density, or input by the following function setting can be selected.
4. To start the measurement, display the weighing display.
   Press the MODE key to display the specific gravity measurement display.
   For the procedure, refer to (2) Method of measuring density (specific gravity) of solid or (4) Measuring the density of a liquid.

Note

☐ The following density function (dS Fnc) is not displayed in the function settings unless density mode is enabled. First, perform the "Register the density mode" operation with the unit setting (Unit) of the function setting. When density mode is activated, " dS Fnc " appears next to " Unit ". For how to change the function setting, refer to "9. Function Table".

Class	Item and parameter		Description
dS Fnc Density function	Ld in Liquid density input	■ 0	Input water temperature
		1	Input density directly
	dS Measurement object select	■ 0	Density measurement of solid
		1	Density measurement of liquid

■ Factory setting

（2）Method of measuring density (specific gravity) of solid （function setting dS 0）

Note

□ Re-set the density of the liquid with "(3) Entering the density of a liquid" as necessary, such as when the temperature of the liquid changes during measurement or when changing the type of liquid. In the density display, the 3 digits (4 digits for 0.0001g models) after the decimal point are fixed. The readability cannot be changed by pressing the [SAMPLE] key.

Density measurement displays the density fixed by measuring the weight in air and measuring the weight in liquid.

The relationship between each state and display is as follows.

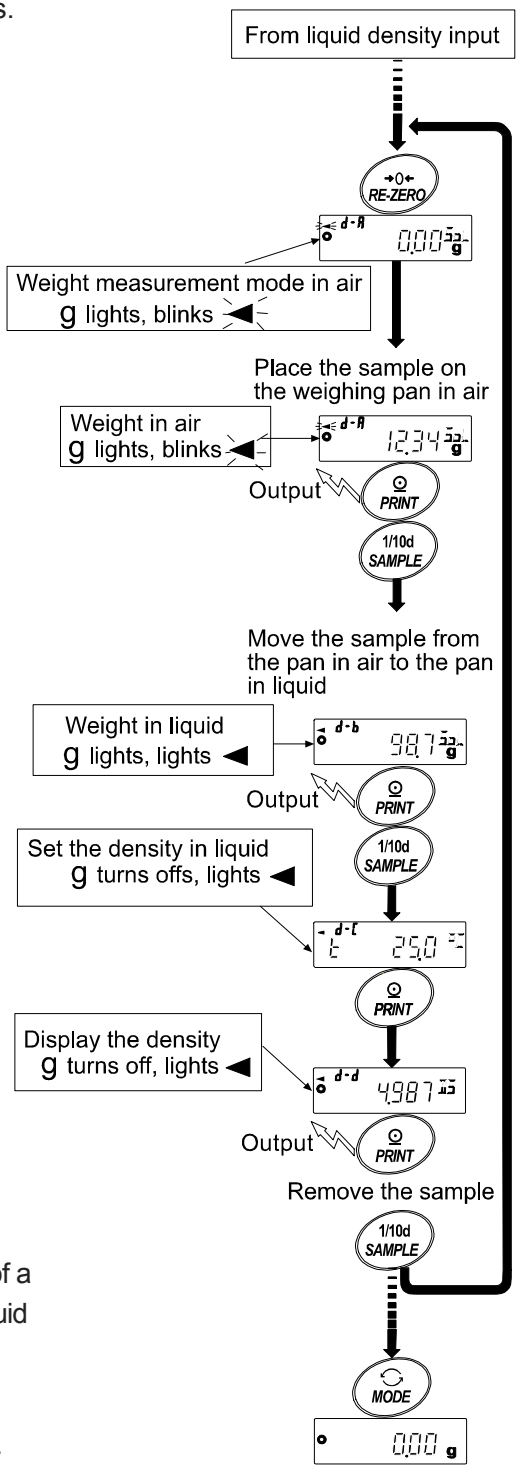

Setting procedure

1. Check the weight measurement mode in air (g lights, blink ◀).
   Press the [RE-ZERO] key to display zero without placing anything on the weighing pan.
2. Place the sample on the weighing pan in air and wait for the display to stabilize. If outputting the mass of the sample, press the [PRINT] key.
   Next, press the [SAMPLE] key to fix the weight in air, and move to the weight measurement mode in liquid (g lights, blink ◀).

□ If auto-zero after data output (Ar-d) is set to on in the function setting, pressing the [PRINT] key to output will trigger the auto reset after output, preventing the density from being measured.

3. Transfer the sample from the weighing pan in air to the weighing pan in liquid and wait for the display to stabilize. If outputting the mass of the sample, press the [PRINT] key.
   Next, press the [SAMPLE] key to fix the weight in liquid and shift to the density input mode (g turned off, lights ◀).
4. Enter the density of the liquid.
   Refer to "(3) Entering the density of a liquid" and set the density.
   Next, press the [PRINT] key to enter the density mode. (g turns off, lights ◀).
5. If outputting the density, press the [PRINT] key.
   If measuring another sample, press the [SAMPLE] key and start with the weighing mode in air. The density unit is "dS".
6. Re-set the density of the liquid with "(3) Entering the density of a liquid" as necessary, such as when the temperature of the liquid changes during measurement or when changing the type of liquid.
7. Press the [MODE] key to enter another weighing mode.

（3）Entering the density of a liquid

Two ways to set the density of a liquid are available in the function table, "Liquid density input (Ld in)" by entering the water temperature or by entering the density directly.

Entering the water temperature （ Ldin0 ）

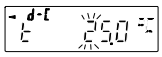

The water temperature currently set (unit: °C, factory setting : 25°C) is displayed.

Use the following keys to change the value. Setting range is 0.0℃ to 99.9℃, in increments of 0.1℃. Refer to the following matrix the " The relation between the water temperature and density".

RE-ZERO （+）key…The key to increase the temperature by one degree. (0 is displayed after 9)

MODE （−）key …… The key to decrease the temperature by one degree. (9 is displayed after 0)

SAMPLE key……Move the blinking digit.

PRINT key……The key to store new water temperature and return to the density mode.(Proceed to Step 5)

CAL key …… The key to cancel the change and return to the density mode. (Proceed to Step 5)

The relation between the water temperature and density

℃	+0	+1	+2	+3	+4	+5	+6	+7	+8	+9
0	0.99984	0.99990	0.99994	0.99996	0.99997	0.99996	0.99994	0.99990	0.99985	0.99978
10	0.99970	0.99961	0.99949	0.99938	0.99924	0.99910	0.99894	0.99877	0.99860	0.99841
20	0.99820	0.99799	0.99777	0.99754	0.99730	0.99704	0.99678	0.99651	0.99623	0.99594
30	0.99565	0.99534	0.99503	0.99470	0.99437	0.99403	0.99368	0.99333	0.99297	0.99259
40	0.99222	0.99183	0.99144	0.99104	0.99063	0.99021	0.98979	0.98936	0.98893	0.98849

g/cm^3

Entering the density directly （ Ldin1 ）

The density currently set (unit : g / cm^3, factory setting : 1.0000g / cm^3) is displayed.

Use the following keys to change the value.

The range to set the density is 0.0000g / cm^3 to 1.9999g / cm^3.

If it is input beyond the settable range value, Error2 is displayed and the display return to the input display.

RE-ZERO （+）key…The key to set the value of the blinking digit .(Next to 9 will be 0.)

MODE （−）key……The key to select the blinking digit to change the value.(Next to 0 will be 9.)

SAMPLE key……Move the blinking digit.

PRINT key……The key to store the change and return to the density mode. (Proceed to Step 5.)

CAL key……The key to cancel the change and return to the density mode. (Proceed to Step 5.)

（4） Measuring the density of a liquid （Function table dSI）

□ In the density display, the 3 digits (4 digits for 0.0001g models) after the decimal point are fixed. Readability can not change with the [SAMPLE] key.

Density is displayed after "Mass measurement in air" and "Mass measurement in liquid".
The procedure of each measurement is as follows:

Measuring procedure

1. Enter the density mode that "g (gram)" is displayed and the processing indicator (◀) blinks. Place nothing on both pan and press the [RE-ZERO] key to display zero.
2. Place the sample on the pan in air.
   If the weight value is stored or output, press the [PRINT] key to store it after a stable weight value is displayed.
   Press the [SAMPLE] key to decide the weight value in air and proceed to next step.（g lights, ◀ blinks）

□ If auto-zero after data output (Ar-d) is set to on in the function setting, pressing the [PRINT] key to output will trigger the auto reset after output, preventing the density from being measured.

3. Place the liquid to measure the density of in the beaker and sink the float.
   At this time, adjust so that the float is about 10 mm below the liquid level.
4. Move the sample to the pan in liquid.
   If the weight value is stored or output, press the [PRINT] key to store it after a stable weight value is displayed. Press the [SAMPLE] key to decide the weight value in liquid and proceed to next step.
   （g turned off, cm3 lights ◀ lights）
5. Enter the volume of the float.
   Refer to "(5) Entering the volume of the float" and enter. Then press the [PRINT] key to return to the density mode.
6. If the density value is stored or output, press the [PRINT] key to store it. If the other sample is measured, press the [SAMPLE] key, and start from measurement of weighing mode in the air. The density unit is " g/cm3 ".
7. Press the [MODE] key to proceed to other modes.

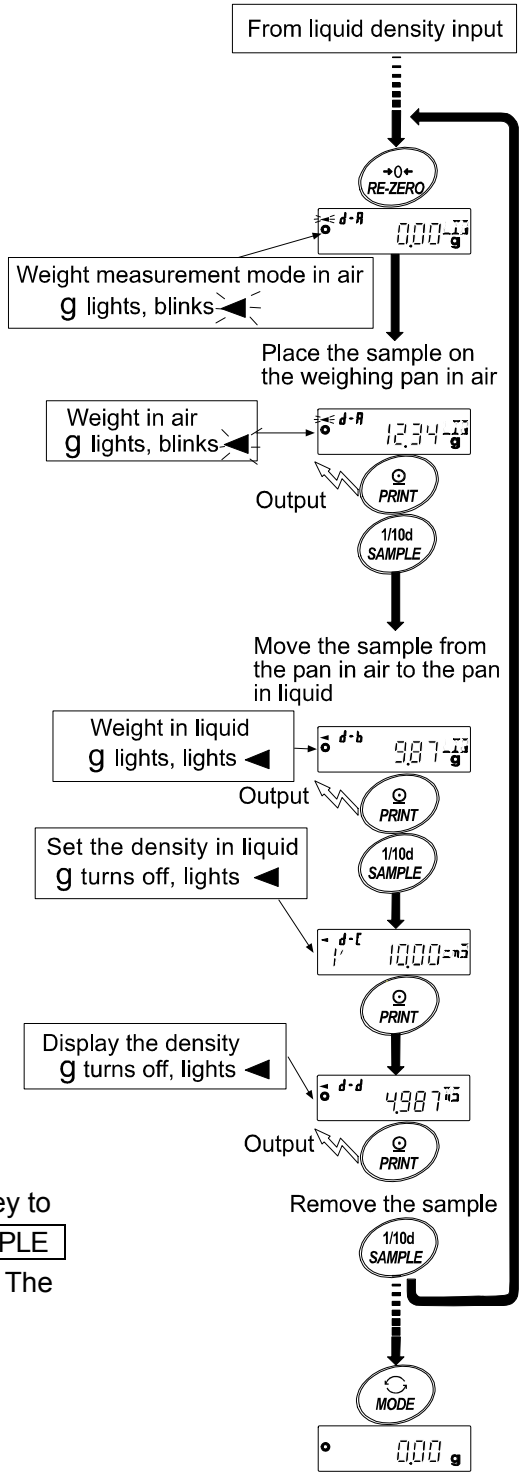

（５）Entering the volume of the float

The volume of the float that is currently set is displayed.（Factory setting is 10.00 c m^3）
Change the setting value as follows.
The setting range is 0.01 cm ^{3} to 99.99 cm ^{3}, every 0.01 cm ^{3}.

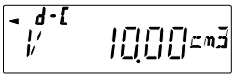

RE-ZERO （＋）Key… The key to set the value of the blinking digit .
(Next to 9 will be 0.)

MODE （－）key …… The key to select the blinking digit to change the value.
(Next to 0 will be 9.)

SAMPLE key…… Move the blinking digit.

PRINT key …… The key to store the change and return to the density mode. (Proceed to Step 5.)

CAL key …… The key to cancel the change and return to the density mode. (Proceed to Step 5.)

19.Password Lock Function

By using the password lock function, it is possible to limit the usage and functions of the balance.
This function is effective for preventing tampering of date / time setting and preventing internal setting changes by the user.
The password is set with four keys [MODE], [SAMPLE], [PRINT] and [RE-ZERO] keys in four digits (4 x 4 x 4 x 4 = 256 outcomes) .
At factory settings, the password lock function is disabled.
Enabling / disabling the password lock function and registering the password are performed in the function table.

Note

The function varies depending on the software version of the balance.

19-1 Balance Software Version 1.200

Two types of setting are possible depending on the "Lock" setting of the function table "Password lock function (PASSwd)".

Lock 0	No password lock function
Lock 1	Request password input at the start of weighing

Lock 0 (No password lock function)

The password lock function is not be used.

Anyone can perform weighing work. In addition, all functions can be used and setting changes are also possible.

Lock 1 (Request password input at the start of weighing)

An administrator (AdMin.) can limit the users of the balance by setting individual passwords.

(The password input is required at the start of weighing with the [ON:OFF] key.)

The balance cannot be in weighing state unless you enter the correct password.

There are two login levels: Administrator (AdMin.) and user (uPRI. to 10)

Administrator (AdMin.)	All functions and settings can be used.
	Passwords for 10 users can be set individually.
User (uPRI. to 10)	Initialization and setting changes are restricted (including clock).
No password	The balance cannot be used.

Items that are limited by login level

Login level	Weighing		
	Password input at weighing start	Calibration	Change the function setting *4
Administrator (AdMin.)	Possible	Possible	Possible
User (uPRI. to 10)	Possible	Impossible	Impossible

*4 Changing response characteristics, setting minimum weight value, function selection and initialization and internal settings (setting of date and time).

19-2 Balance Software Version 1.211 Or Later

Three types of settings are possible depending on the "Lock" setting of the Function Table "Password lock function (PASSwd)".

Lock 0	No password lock function
Lock 1	Request password input at the start of weighing
Lock 2	To change the setting, login is required with the administrator's password.

Lock 0 (No password lock function)

The password lock function is not used.

Anyone can perform weighing work. In addition, all functions can be used and setting changes are also possible.

Lock 1 (Request password input at the start of weighing)

An administrator (ADMIN) can limit the users of the balance by setting individual passwords.

(The password input is required at the start of weighing with the ON:OFF key.)

The balance cannot be in weighing state unless you enter the correct password.

There are two login levels: Administrator (ADMIN) and user (USER 01 to 10)

Administrator (ADMIN)	All functions and settings can be used.
	Passwords for 10 users can be set individually.
User (USER 01 to 10)	Initialization and setting changes are restricted (including clock).
No password	The balance cannot be used.

Lock 2 (To change the setting, login is required with the administrator's password.)

Anyone can perform weighing work, and initialization and setting changes can be restricted (including clock).

(Password input is not requested when weighing starts with the ON/OFF key.)

There are two levels of login level :Administrator (ADMIN) and user (GUEST)

Administrator (ADMIN)	All functions and settings can be used.
Guest (GUEST)	Initialization and changing setting is restricted.(including clock)

When weighing is started with the ON:OFF key while pressing the CAL key when the display is off, the password of the administrator (ADMIN) is requested.

Items that are limited by login level

Login level	Weighing		
	Password input at weighing start	Calibration	Change the function setting*5
Administrator (ADMIN)	Necessary	Possible	Possible
User (USER 01 to 10)		Impossible *6	Impossible
Guest (GUEST)	Unnecessary		

*5 Changing response characteristics, setting of minimum weight value, confirming repeatability with built-in weight, function selection and initialization, internal settings (setting of date and time).

*6 The administrator (ADMIN) can set this to prohibited as shown in "8-1 Permit Or Inhibit".

19-3 Enable Password Lock Function

By the password function (PASSwd) of the Function table, the password function can be switched between "Invalid (OFF) / Valid (ALL) / Valid (Fnc)".

1. In the weighing mode, press and hold the [SAMPLE] key for 2 seconds to display [bASFnc].
2. Press the [SAMPLE] key several times to display [PASSwd].
3. Press the [PRINT] key to display [Lock OFF].
   (To cancel, press the [CAL] key.)
4. Press the [RE-ZERO] key to display [Lock ALL].
   (Press the [RE-ZERO] key again to display [Lock Fnc].

5. Press the [PRINT] key to display [SurE:YES No].
   ("No" blinking while "No" selected.)
6. Press the [RE-ZERO] key to switch YES / No.
7. Display [SurE:YES No]. (YES blinking when selected YES.)

8. Press the [PRINT] key while YES is selected to enable the password lock function.
   (With Lock 1, password input is requested when the display is ON).

9. [PASS No] is displayed. To register (change) the password, proceed to 4 on the "19-6 Registering Password (Changing)". If you will not register, press the [CAL] key twice to return to the weighing display.

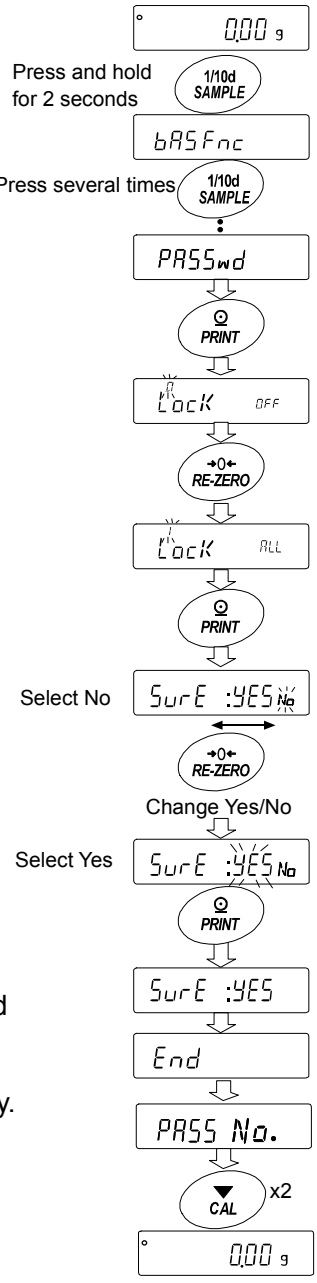

Note

If the software version of the balance is 1.200, only switching between Invalid (OFF) / Valid (ON) can be selected.

19-4 How To Input The Password At The Start Of Weighing

Lock 1 (Request password input at the start of weighing)

1. Press the ON:OFF key while the display off.
2. After display PASSword, it becomes password input display ----PW.
3. Input 4 digits password using the following keys.
   The balance will turn automatically after no operation for ten minutes.
   MODE key ..... Character M
   SAMPLE key..... Character S
   PRINT key ..... Character P
   RE-ZERO key..... Character 7
   CAL key ..... Back key
4. If the password is correct, the login level will be displayed, the weighing will be displayed after all lamps are illuminated. After entering the administrator's password, log in as an administrator.
   (At factory settings, the password is set to 7777 by RE-ZERO key input 4 times at the administrator level.)
   If the password is incorrect, the buzzer sounds 3 times, FAIL will display and the display will turn off.

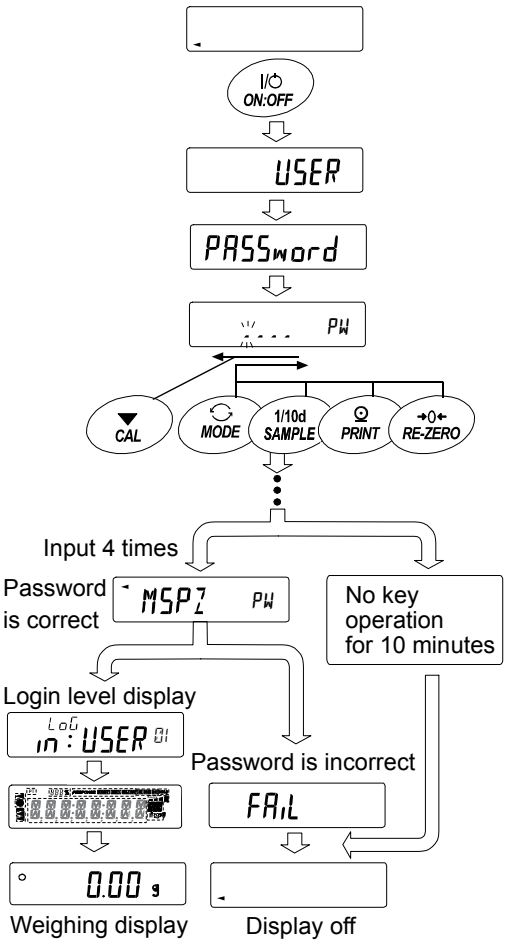

Lock 2 (To change the setting, login is required with the administrator's password)

When logged in as a guest (GUESt)

1. Press the ON:OFF key while the display off.
2. After LoG IN: GUEST displayed, return to the weighing display.

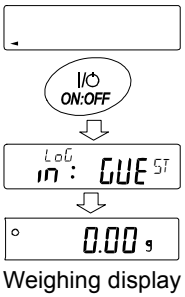

When logging in as administrator (ADMIN.) (Lock 1 or Lock 2)

1. Press the [ON:OFF] key with holding [CAL] key while the display off.
2. Input the 4 digits password using the following keys. The balance will turn automatically after no operation for 10 minutes.

   [MODE] key..... Character M
   [SAMPLE] key..... Character S
   [PRINT] key ..... Character P
   [RE-ZERO] key.... Character 7
   [CAL] key ..... Back key

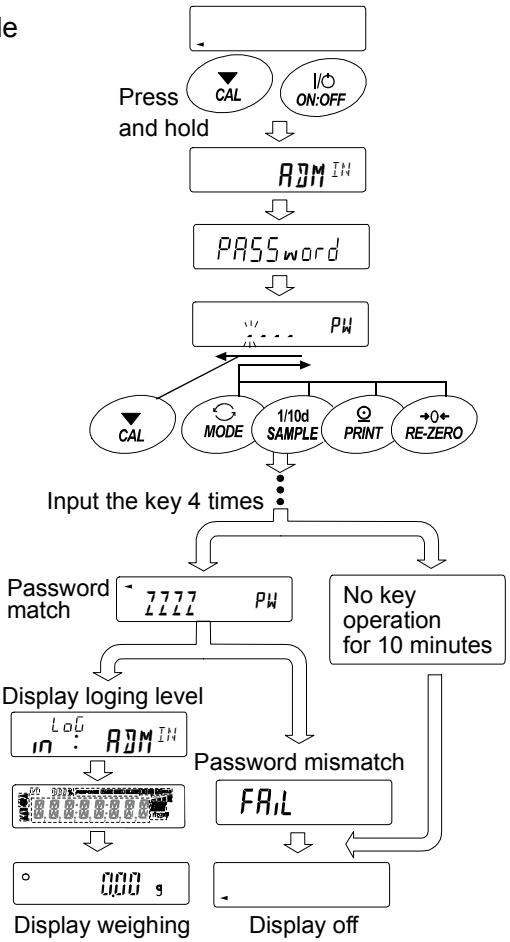

3. If the password is correct, the login level will be displayed, the weighing will be displayed after all lamps are displayed. (At factory settings, the password is set with [7777] of [RE-ZERO] key input 4 times at the administrator level.) If the password is incorrect, the buzzer sounds 3 times in [FAIL] display and the display turns off.

Note

If the software version of the balance is 1.200, the login level at login is not displayed. Also, for login at the administrator level, enter the administrator's password at weighing start with " Lock 1 ".

19-5 How To Logout

Log out by turning off the display by pressing the [ON:OFF] key. If set to " Lock 1 ", the password will be requested again when switching the display from off to the weighing mode.

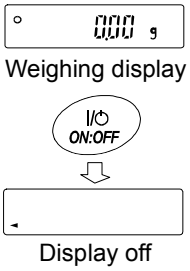

19-6 Registering Password (Changing)

The password can be changed at "Password (PASS no.)" of the Function Table.

1. Press and hold the [SAMPLE] key for 2 seconds in the weighing mode.
   [bASFnc] is displayed.
2. Press the [SAMPLE] key several times until [PASSwd] is displayed.
3. Press the [PRINT] key to display [Lock].
4. Press the [SAMPLE] key to display [PASS No.].
5. Press the [PRINT] key to display [ADMIN.].
6. Press the [SAMPLE] key to change the login level ADMIN. / USER 01 to 10 .
   If the password is already registered at the login level, the stability mark [∘] is lit. (changeable)
7. Press the [PRINT] key to change the password.
   Refer to "19-7 Changing Password".

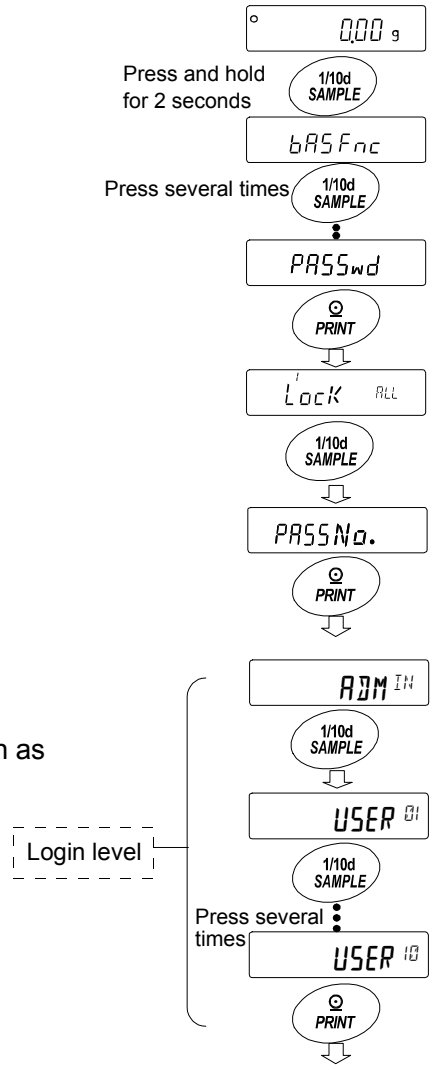

Refer to "19-7 Changing Password"

Note

- ☐ Log out by turning off the display to press the [ON:OFF] key.
- ☐ If set to Lock 2, the ADMIN password is required when logging in as an administrator.
  Password registration of USER 01 to 10 is unnecessary.

19-7 Changing Password

1. Refer to "19-6 Registering Password (Changing)" and display the login level you want to change the password on.
2. Press the [PRINT] key to display the current password. At factory settings, the password is [7777]. (the [RE-ZERO] key, 4 times)
3. Set the new password using the following keys. The balance will turn automatically after no operation for 10 minutes.
   - [MODE] key ..... Character M
   - [SAMPLE] key ..... Character S
   - [PRINT] key ..... Character P
   - [RE-ZERO] key ..... Character 7
   - [CAL] key ..... Back key
   - [CAL] key(long press)..Delete password

   (Refer to "19-8 How To Delete The Password USER 01 to 10)
4. Input 4 characters of the new password using these keys.
5. The balance displays [SurE:YES No] where "No" is blinking when "No" is selected. (Press the [CAL] key to return to the 4th character input.)
6. Press the [RE-ZERO] key to display [SurE:YES No] where "YES" is blinking when "YES" is selected.
7. Press the [PRINT] key to store the new password when "YES" is selected.
8. When the setting is completed, the next level is displayed. To continue the setting, set it from "6". To end the setting, press the [CAL] key 3 times to return to the weighing display.

Refer to
"19-6 Registering Password (Changing)"

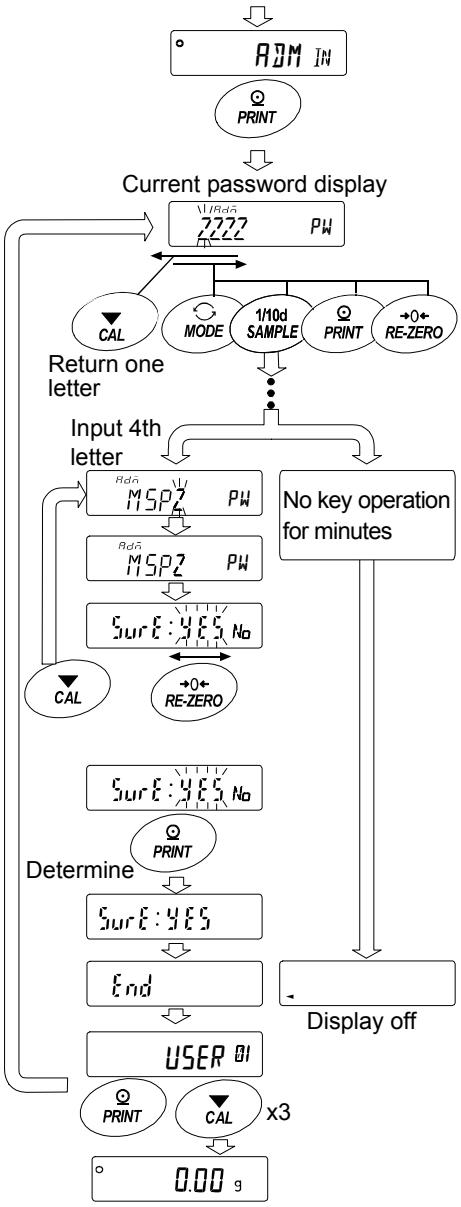

Note

- ☐ If you forget your password, the balance can not be used. Please record and keep the password you registered.
- ☐ The password that is already registered by the administrator (ADMIN) cannot be registered by the user (USER 01 to 10).

19-8 How To Delete The Password (USER 01 to 10)

1. Refer to "19-7 Changing Password" and select the user (USER 01 to 10) and display the Password input screen.

2. Hold down the [CAL] key when setting the password and display [CLEAR] (blink).

3. Press the [PRINT] key to display [CLEAR No].

4. Press the [RE-ZERO] to change Go / No

5. Press the [PRINT] when [CLEAR Go] to display [End] and delete the password.

Refer to
"19-7 Changing Password"

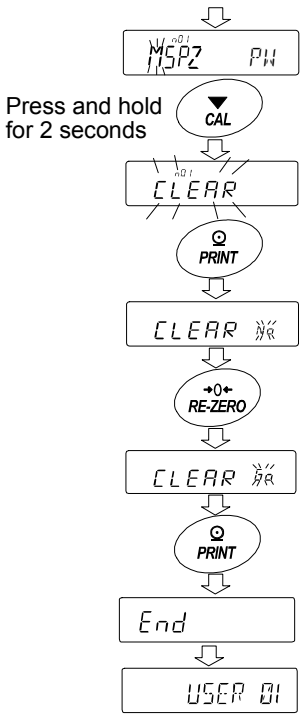

Note

- ☐ The administrator's password cannot be deleted.
  Please refer to "19-6 Registering Password (Changing)" and "19-7 Changing Password" to change an arbitrary password.

19-9 Missing Password

If the correct password is missing, the balance can not be used.
Contact your local A&D dealer to reset the password to factory settings.

20.Repeatability Check Function (GX-AE/GX-A Series Only)

Repeatability is an indicator of variations in measured values when the same weight is repeatedly loaded and unloaded, and it is usually expressed in terms of standard deviation (σ_{n-1}).
The GX-AE/GX-A series have a built-in weight.

With the repeatability check function, the balance obtains 10 measurement data using the built-in weight and displays its standard deviation.
By installing the balance and using this function, it is possible to check repeatability in the environment where the balance is installed.
This function is available from balance software version 1.211 or later.

Ex. "Standard deviation = 10.0 mg" means that the result of repeated measurements of the same weighing material falls within the range ±10.0 mg at a frequency of about 68%.

1. Press and hold the [SAMPLE] key for 4 seconds in the weighing display. After [rEP tESt] is displayed, release the key.
2. When [rEP tESt] is displayed, data collection starts automatically.
   While data is being collected, [rEP] blinks.
   To cancel, press the [CAL] key.
   [CANCEL] displays and you are returned to return to weighing mode.
3. When data collection is completed, repeatability (standard deviation) is displayed.
4. Press the [PRINT] key to output repeatability (standard deviation).
5. Press the [CAL] key to return to weighing mode.

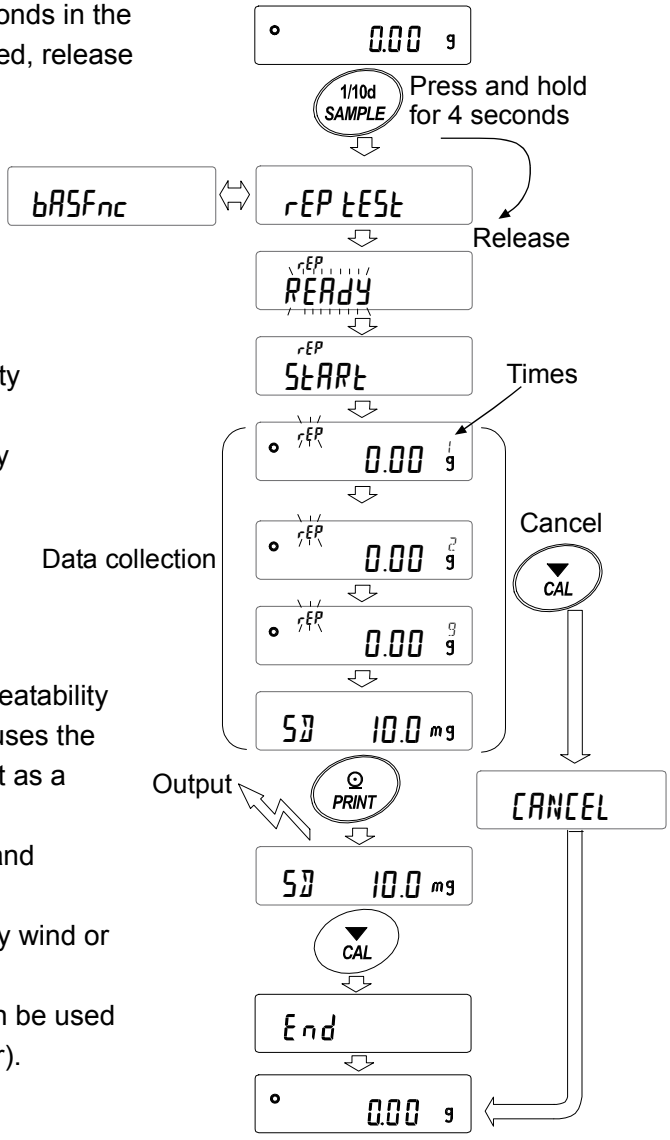

Note

- ☐ The result of this function differs from the repeatability conditions of "26. Specifications" because it uses the weight of the balance (about 190g), so treat it as a reference value.
- ☐ This function cannot be used with GX-124A and GX-124AE.
- ☐ In order to measure correct data, do not apply wind or vibration while collecting data.
- ☐ While using the password lock function, it can be used only when logged in as [ADMIN] (administrator).

21.Interface Specification（Standard）

Download "Communication manual" from our website **(https://www.aandd.jp)** and refer to it.

22.Maintenance

22-1 Treatment Of The Balance

☐ Clean the balance with a lint free cloth that is moistened with warm water and a mild detergent.
☐ Do not use organic solvents to clean the balance.
☐ Do not disassemble the balance.
☐ Use the original packing material for transportation.

23.Troubleshooting

23-1 Checking The Balance Performance And Environment

The balance is a precision instrument. When the operating environment or the operating method is inadequate, correct weighing can not be performed. Place a sample on the pan and remove it, and repeat this several times. If the balance seems to have a problem with repeatability or to perform improperly, check as described below. If improper performance persists after checking, contact the local A&D dealer for repair.
"Frequently asked questions" and their answers are also posted on our website <https://www.aandd.jp>.

1. Checking that the balance performs properly

☐ Please check the operation of the balance by the self diagnosis function.
Refer to "6-2 Self Check Function / Automatic Setting Of Minimum Weighing Value By ECL".
Fatal faults are indicated by messages.
☐ Check the balance performance using an external weight. Be sure to place the weight in the center of the weighing pan.
☐ Check the balance repeatability, linearity and calibrated value using external weights with a known value.

2. Checking that the operating environment or weighing method is proper

Operating environment

☐ Is the weighing table solid enough? (Especially 0.0001g and 0.001g model)
☐ Is the balance level? Refer to "2-2 Precaution" How to adjust the bubble spirit level.
☐ Is the operating environment free from vibration and drafts?
☐ Is there a strong electrical or magnetic noise source such as a motor near the balance?

Weighing method

☐ Does the weighing pan rim touch anything? Is the weighing pan assembly installed correctly?

☐ Is the [RE-ZERO] key pressed before placing a sample on the weighing pan?

☐ Is the sample placed in the center of the weighing pan?

☐ Has the balance been calibrated using the internal mass (one-touch calibration)? (Only for GX-AE/GX-A series)

☐ Has the balance been warmed up for one hour before weighing?

Sample and container

☐ Has the sample absorbed or lost moisture due to the ambient conditions such as temperature and humidity?

☐ Has the temperature of the container been allowed to equalize to the ambient temperature? Refer to "2-3 During Use".

Is the sample charged with static electricity? Refer to "2-3 During Use".
(This occurs especially with 0.0001g and 0.001g models when the relative humidity is low.)

☐ Is the sample of magnetic material such as iron? There are cautions about weighing magnetic materials. Refer to "2-3 During Use".

23-2 Error Codes

Display	Error code	Description
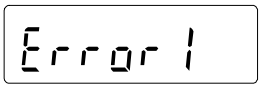	EC, E11	**Stability error** The balance cannot stabilize due to an environmental problem. Check around the pan. Prevent vibration, drafts, temperature changes, static electricity and magnetic fields, from influencing the balance. Refer to "2-3 During Use". To return to the weighing mode, press the CAL key.
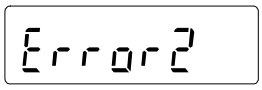		**Out of the setting range** The data to be stored is out of the setting range.
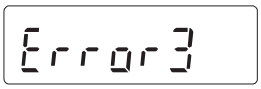		**Malfunction of the internal memory element of the balance** If this error continues to be displayed, repair is necessary. Please contact your dealer.
	EC, E16	**Internal mass error** Applying the internal mass does not yield a change in the mass value as specified. Confirm that there is nothing on the pan and perform the weighing operation from the beginning again.
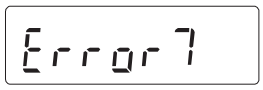	EC, E17	**Internal mass error** The internal mass application mechanism does not function properly. Perform the weighing operation from the beginning again.
		Abnormality in the internal memory data of the balance If this error continues to be displayed, repair is necessary. Please contact your dealer.
		Abnormality in the internal memory data of the balance If this error continues to be displayed, repair is necessary. Please contact your dealer.
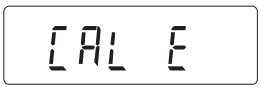	EC, E20	**Calibration weight error (Positive value)** The calibration weight is too heavy. Confirm the calibration mass value. Press the CAL key to return to the weighing mode.
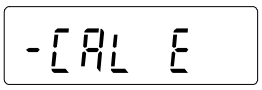	EC, E21	**Calibration weight error (Negative value)** The calibration weight is too light. Confirm the calibration mass value. Press the CAL key to return to the weighing mode.
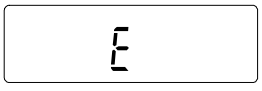		**Overload error** A sample beyond the balance weighing capacity has been placed on the pan. Remove the sample from the pan.
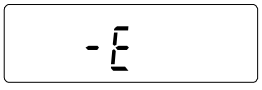		**Weighing pan Error** The mass value is too light. Confirm that the weighing pan is properly installed and calibrate the balance.

Display	Error code	Description
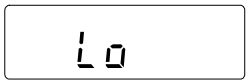		**Sample mass error** The balance can not store the sample for the counting mode or for the percent mode because it is too light. Use a larger sample.
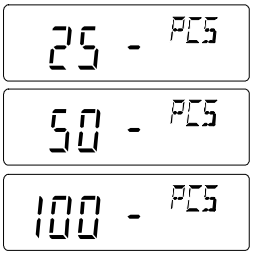		**Unit mass error** The sample unit mass for the counting mode is too light. Storing and using it for counting will cause a counting error. Add samples to reach the specified number and press the PRINT key. Pressing the PRINT key without adding samples will shift the balance to the counting mode. But, for accurate counting, be sure to add samples.
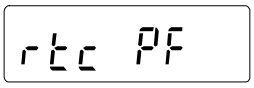		**Clock battery error** The clock backup battery has been depleted. Press any key and set the time and date. The clock and calendar function works normally as long as the AC adapter is connected to the balance. If this error appears frequently, contact the local A&D dealer.
		Power supply voltage fault The voltage supplied from the AC adapter is abnormal. Please check if the problem is the AC adapter supplied with the balance.
  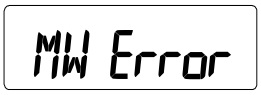		**ECL repeatability** With the self-check function, the standard deviation (SD) of repeatability due to electronically controlled load (ECL) exceeded 50 digits. Please revise the installation environment of the balance. □ SD Error This is displayed when repeatability is displayed by ECL. □ MW Error This is displayed when the minimum weighing value (reference value) by ECL is displayed. Refer to "6-2 Self Check Function / Automatic Setting Of Minimum Weighing Value by ELC.
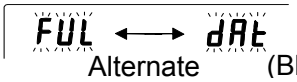 Alternate (Blink)		**Full memory** The maximum number or stored weighing values has been reached. In order to store more weighing values, it is necessary to delete the data. Refer to "11 Data Memory"
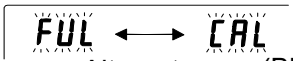 Alternate (Blink)		**Full memory** The stored calibration and calibration test history has reached 50 instances. If more is stored, the old history will be deleted. Refer to "11 Data Memory"
	EC, E00	**Communications error** A protocol error occurred in communications. Confirm the format, baud rate and parity.
	EC, E01	**Undefined command error** An undefined command was received. Confirm the command.

Display	Error code	Description
	E C, E 0 2	**Not ready** A received command cannot be processed. Example: The balance received a "Q" command, but not in the weighing mode. The balance received a "Q" command while processing a RE-ZERO command. Adjust the delay time to transmit a command.
	E C, E 0 3	**Timeout error** If the timeout parameter is set to "t-UP1", the balance did not receive the next character of a command within the time limit of one second. Confirm the communication.
	E C, E 0 4	**Excess characters error** The balance received excessive characters in a command. Confirm the command.
	E C, E 0 6	**Format error** A command includes incorrect data. Example: The data is numerically incorrect. Confirm the command.
	E C, E 0 7	**Parameter setting error** The received data exceeds the range that the balance can accept. Confirm the parameter range of the command.

23-3 Other Display

When this indicator (◄) blinks, automatic self calibration is waiting. If the balance is not used for several minutes with this indicator blinking, the balance automatically performs calibration using the internal mass. The blinking period depends on the operating environment.

Advice The balance can be used when this indicator is blinking, but we recommend that you perform calibration before weighing.

23-4 Asking For Repair

If the balance needs service or repair, contact your local A&D dealer.
The balance is a precision instrument. Use much care when handling the balance and observe the following when transporting the balance.

- ☐ Use the original packing material for transportation.
- ☐ Remove the weighing pan, pan support, breeze break ring and dust plate from the main unit.

24.Connection With Peripheral Device

Download "Communication manual" from our website **(https://www.aandd.jp)** and refer to it.

24-1 Command

Download "Communication manual" from our website **(https://www.aandd.jp)** and refer to it.

24-2 Key Lock Function

This function restricts the key operation of the balance by sending a specified command to the balance.
Download "Communication manual" from our website **(https://www.aandd.jp)** and refer to it.

25.How To Check The Software Version Of The Balance

Specifications may vary depending on the software version of the balance.

1. Insert the AC adapter on the balance again.
2. The LEVEL display blinks.
3. After that, P-*.*** will be displayed.

   The number of " *.*** " becomes the software version.

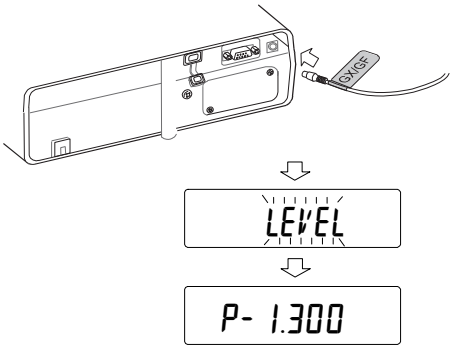

26. Specifications

26-1 Common Models

26-1-1 Function

Internal mass		For GX-A / GX-AE series (Approximately 190g) *1
Ionizer (static eliminator)		For GX-AE series
Sensitivity drift (10℃ to 30℃)		±2ppm / ℃ (When auto calibration is OFF.)
Operating environment		5℃ to 40℃, 85%RH or less (no condensation)
Display refresh rate		5 times/second, 10 times/second, or 20 times/second
Display mode (unit)		g (gram), PCS (counting mode), % (percent mode), *2 ct (Metric carat), mom (Momme) and density mode
Counting mode	Number of samples	5, 10, 25, 50 or 100 pieces
Percent mode	Readability	0.01%, 0.1%, 1% (Automatically changed by 100% mass)
Interface		RS-232C, USB
AC adapter		Confirm that the adapter type is correct for the local voltage and power receptacle type Power consumption: Approx. 30 VA (supplied to the AC adapter)

*1 The mass of the internal mass may change due to corrosion or other damage caused by the operating environment, or it may change due to aging.

*2 For 0.0001g models, "mg" is available.

26-1-2 Dimension

Model	0.0001g	0.001g	0.01g	0.1g
Weighing pan diameter	ϕ 90 mm	128 x 128 mm	165 x 165 mm	
Mass of product	Approx. 7 kg	Approx. 5 kg	Approx. 5 kg	
External dimensions	259(w) x 358(D) x 332(H) mm (with glass breeze break)	212(w) x 317(D) x 171(H) mm (with small breeze break)	212(w) x 317(D) x 93(H) mm	

26-2 Individual Models

26-2-1 0.0001g Models

		GX-124AE GX-124A GF-124A	GX-224AE GX-224A GF-224A	GX-324AE GX-324A GF-324A
Weighing capacity		122g	220g	320g
Maximum display		122.0084g	220.0084g	320.0084g
Readability		0.0001g		
Repeatability (Standard deviation)		0.0001g		0.0002g (300g) 0.0001g (200g)
Linearity		± 0.0002g		± 0.0003g
Stabilization time (FAST setting, good environment)		Approx. 1.5 sec (100g)	Approx. 2 sec (200g) Approx. 1.5 sec (100g)	Approx. 2 sec (300g) Approx. 1.5 sec (100g)
Counting mode	Minimum unit mass	0.0001g		
Percent mode	Minimum 100% mass	0.0100g		
Carat	Weighing capacity	610 ct	1100 ct	1600 ct
	Readability	0.001 ct		
Momme	Weighing capacity	32 mom	58 mom	85 mom
	Readability	0.0001 mom		
External calibration weight		100g (factory setting) 100g 50g	200g (factory setting) 200g 100g 50g	200g (factory setting) 300g 200g 100g 50g

26-2-2 0.001g Models

		GF-123A	GX-203A GF-203A	GX-303A GF-303A	GX-403A GF-403A	GX-603A GF-603A	GX-1003A GF-1003A	GX-1603A GF-1603A
Weighing capacity		122g	220g	320g	420g	620g	1100g	1620g
Maximum display		122.084g	220.084g	320.084g	420.084g	620.084g	1100.084g	1620.084g
Readability		0.001g						
Repeatability (Standard deviation)		0.001g						0.002g (1600g) 0.001g (1000g)
Linearity		±0.002g					±0.003g	
Stabilization time (FAST setting, good environment)		Approx. 1 sec Approx. 0.8 sec (5g)						Approx.1.5 sec Approx.0.8 sec (5g)
Accuracy after calibration with internal mass *		±0.010g						±0.010g (1000g)
Counting mode	Minimum unit mass	0.001g						
Percent mode	Minimum 100% mass	0.100g						
Carat	Weighing capacity	610 ct	1100 ct	1600 ct	2100 ct	3100 ct	5500 ct	8100 ct
	Readability	0.005 ct						
Momme	Weighing capacity	32 mom	58 mom	85 mom	112 mom	165 mom	293 mom	432 mom
	Readability	0.0005 mom						
External calibration weight		100g 50g	200g (factory setting) 200g 100g 50g	200g (factory setting) 300g to 100g (100g interval) 50g	400g (factory setting) 400g to 100g (100g interval) 50g	500g (factory setting) 600g to 100g (100g interval) 50g	1000g (factory setting) 1000g to 100g (100g interval) 50g	1000g (factory setting) 1600g to 100g (100g interval) 50g

* The operating environment does not include excessive change of ambient temperature, humidity, vibration, drafts, magnetic fields and static electricity.

26-2-3 0.01g Models

		GF-1202A	GX-2002A GF-2002A	GX-3002A GF-3002A	GX-4002A GF-4002A	GX-6002A GF-6002A	GX-10002A GF-10002A
Weighing capacity		1220g	2200g	3200g	4200g	6200g	10200g
Maximum display		1220.84g	2200.84g	3200.84g	4200.84g	6200.84g	10200.84g
Readability		0.01g					
Repeatability (Standard deviation)		0.01g					0.02g (10000g) 0.01g(5000g)
Linearity		±0.02g				±0.03g	
Stabilization time (FAST setting, good environment)		Approx. 1 sec Approx. 0.8 sec (50g)					Approx.1.5 sec (10g) Approx.0.8 sec (50g)
Accuracy after calibration with internal mass *		±0.10g		±0.15g		±0.15g (5000g)	
Counting mode	Minimum unit mass	0.01g					
Percent mode	Minimum 100% mass	1.00g					
Carat	Weighing capacity	6100 ct	11000 ct	16000 ct	21000 ct	31000 ct	51000 ct
	Readability	0.05 ct					
Momme	Weighing capacity	325 mom	586 mom	853 mom	1120 mom	1653 mom	2720 mom
	Readability	0.005 mom					
External calibration weight		1000g 500g	2000g (factory setting) 2000g 1000g 500g	2000g (factory setting) 3000g to 1000g (1000g interval) 500g	4000g (factory setting) 4000g to 1000g (1000g interval) 500g	5000g (factory setting) 6000g to 1000g (1000g interval) 500g	10000g (factory setting) 10000g to 1000g (1000g interval) 500g

* The operating environment does not include excessive change of ambient temperature, humidity, vibration, drafts, magnetic fields and static electricity.

26-2-4 0.1g Model

		GX-6001A GF-6001A	GX-10001A GF-10001A
Weighing capacity		6200g	10200g
Maximum display		6208.4g	10208.4g
Readability		0.1g	
Repeatability (Standard deviation)		0.1g	
Linearity		±0.1g	
Stabilization time (FAST setting, good environment)		Approx. 1 sec Approx. 0.8 sec (500g)	
Accuracy after calibration with internal mass *		±0.5g (5000g)	
Counting mode	Minimum unit mass	0.1g	
Percent mode	Minimum 100% mass	10.0g	
Carat	Weighing capacity	31000 ct	51000 ct
	Readability	0.5 ct	
Momme	Weighing capacity	1653 mom	2720 mom
	Readability	0.05 mom	
External calibration weight		5000g (factory setting) 6000g to 1000g (1000g interval) 500g	10000g (factory setting) 10000g to 1000g (1000g interval) 500g

* The operating environment does not include excessive change of ambient temperature, humidity, vibration, drafts, magnetic fields and static electricity.

27. External Dimensions

GX-124AE / GX-224AE / GX-324AE
GX-124A /GX-224A / GX-324A
GF-124A /GF-224A / GF-324A

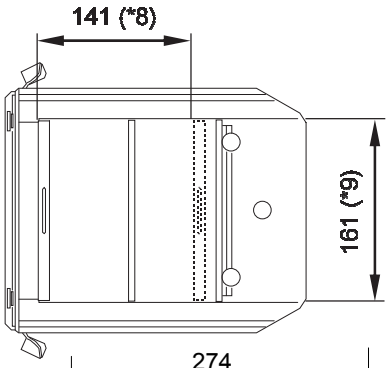

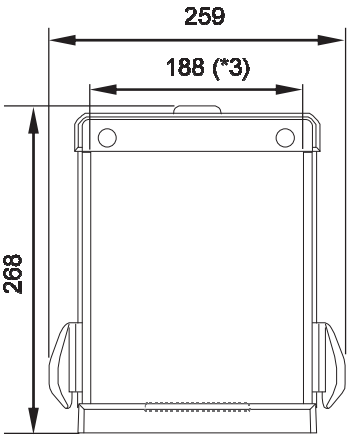

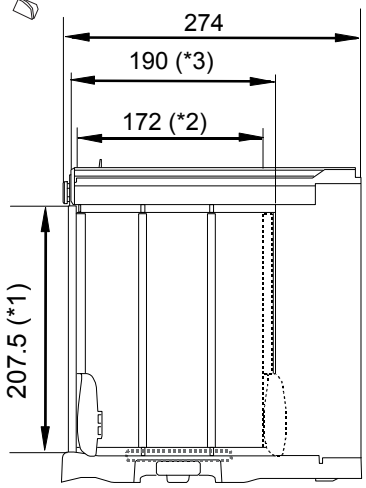

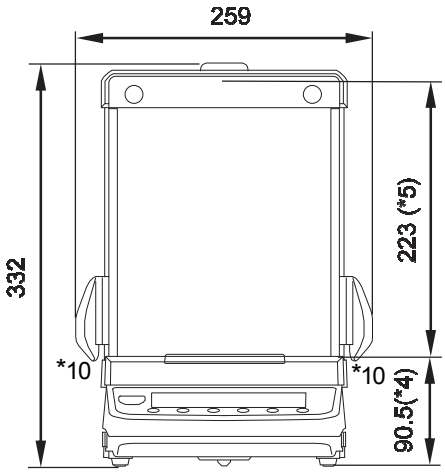

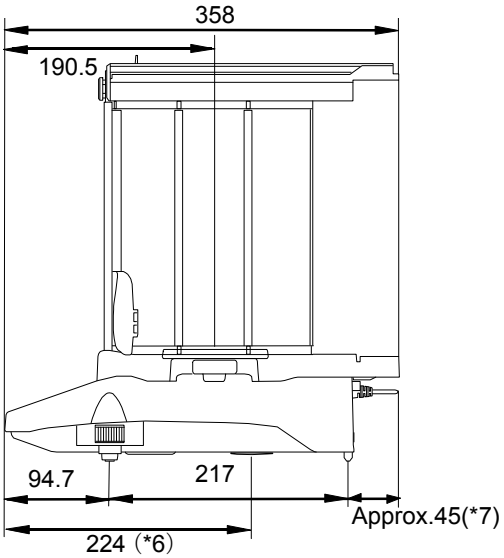

*1 Opening height of side sliding door
*2 Maximum width when side sliding door is open
*3 Inside dimension
*4 Height of weighing pan
*5 Height from the weighing pan to the top of the sliding door of the glass breeze break
*6 Area under the floor weighing platform
*7 DC jack protruding dimension of AC adapter
*8 Maximum height of the sliding door when open
*9 Width of the top of the sliding door when open
*10 Can not open doors on both sides at the same time.

GX-203A / GX-303A / GX-403A / GX-603A / GX-1003A / GX-1603A
GF-123A /GF-203A / GF-303A / GF-403A / GF-603A / GF-1003A / GF-1603A

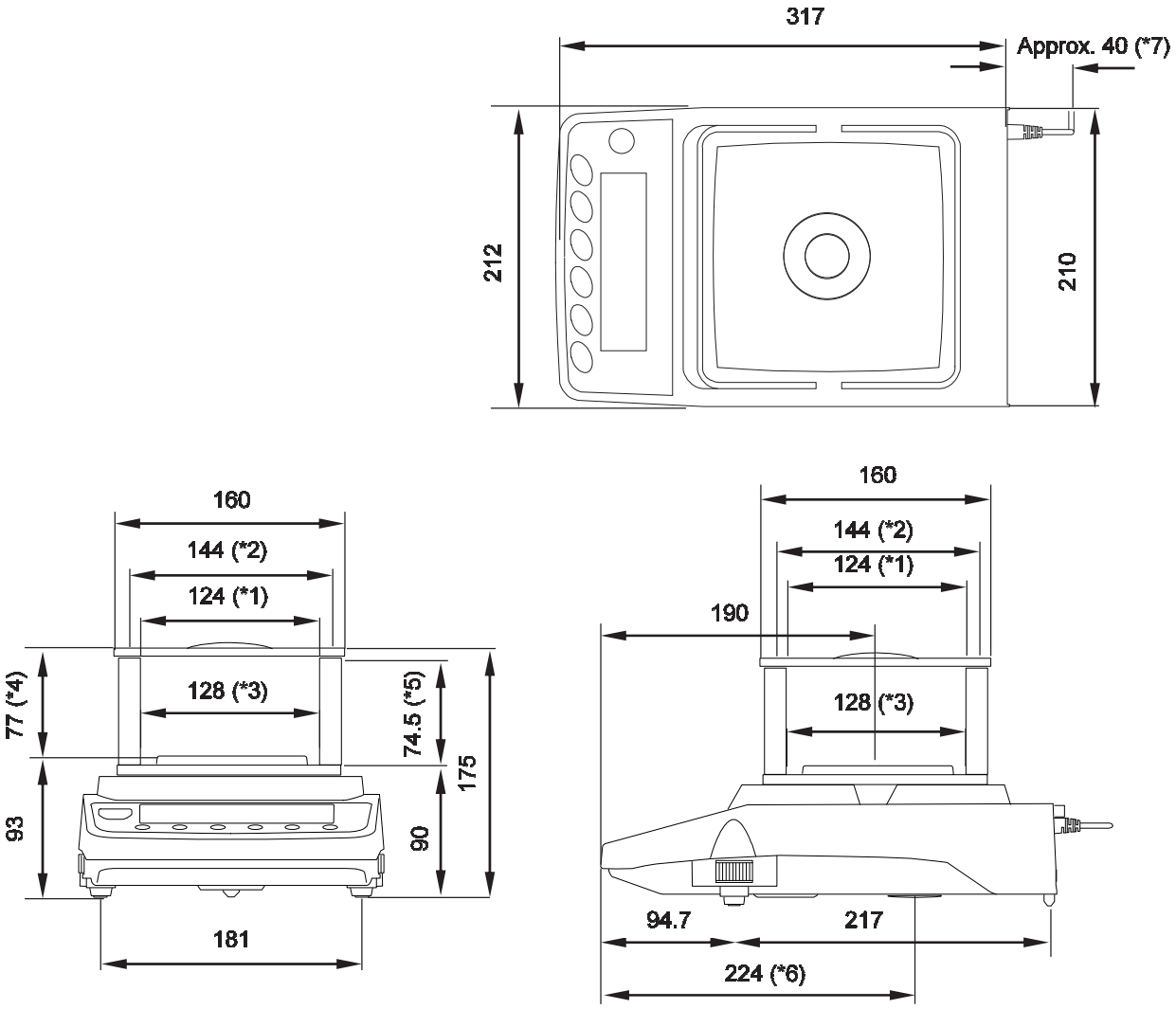

*1 Opening width when transparent plate is removed.

*2 Inside dimension

*3 Weighing pan size

*4 Height from the weighing pan to the lid of the breeze break.

*5 Opening height when transparent plate is removed.

*6 Area under the floor weighing platform.

*7 DC jack protruding dimension of AC adapter.

GX-2002A / GX-3002A / GX-4002A / GX-6002A / GX-10002A/ GX-6001A/ GX-10001A
GF-1202A / GF-2002A / GF-3002A / GF-4002A / GF-6002A / GF-10002A/ GF-6001A / GF-10001A

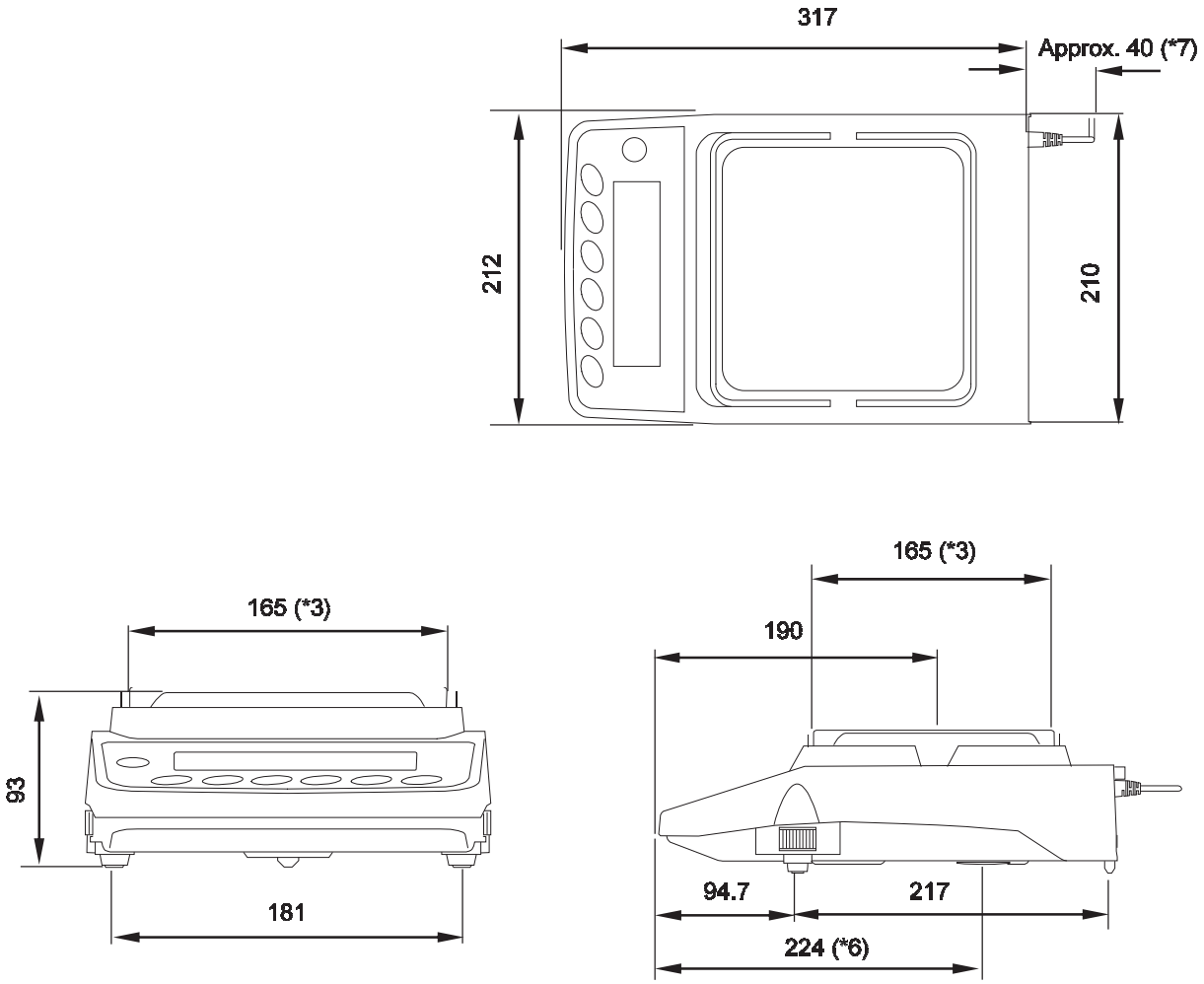

*3 Weighing pan size

*6 Area under the floor weighing platform.

*7 DC jack protruding dimension of AC adapter.

27-1 Options And Peripheral Instruments

Options

GXA-03： 2nd RS-232C interface

☐ RS-232C Interface insulation type for expansion

GXA-04： Comparator relay output / buzzer / external key input intercafe

☐ Outputs comparator results.

GXA-06： Analog output interface (factory installed / dealer option)

☐ This option outputs a voltage of 0 to1V (or 0.2 to1V).

Fxi-08： Ethernet interface

☐ Enables the balance to communicate with computers on a network.

☐ Multiple balances on a network can be controlled by one computer.

GXA-09： Built-in rechargeable battery (factory-installed / dealer option)

☐ Enables the balance to be used in an environment where the AC adapter can not be used.

☐ Charging time is approximately 10 hours, and continuous use time is approximately 14 hours.

GXA-10： Large glass breeze break

☐ Breeze break unit with a glass door

GXA-12： Animal weighing pan (for models of 320g capacity or higher)

☐ Container with depth to make it difficult for animals to escape

GXA-13： Density determination kit (for the 0.001g models only)

☐ Unit that enables easy weighing of the sample's weight in air and in water.

GXA-14： Density determination kit (for the 0.0001g models only)

☐ Unit that enables easy weighing of the sample's weight in air and in water.

GXA-17： Large glass breeze break with built-in fanless ionizer and external IR switch

☐ GX-10 breeze break unit with ionizer

GXA-23-PRINT： External key input interface + the AX-SW137-PRINT foot switch

☐ External contact input terminal that can operate PRINT and RE-ZERO key.
Foot switch of print function included. (AX-SW137-PRINT)

GXA-23-RE-ZERO： External key input interface + the AX-SW137-REZERO foot switch

☐ External contact input terminal that can operate PRINT and RE-ZERO key.
Foot switch of RE-ZERO function included. (AX-SW137-REZERO)

GXA-23-PLUG： External key input interface + the AX-T-314A-S plug

☐ External contact input terminal that can operate PRINT and RE-ZERO key.
Three assembled stereo plugs are included.
Note: In order to use, it is necessary to solder the attached plug and the switch prepared by the customer.

GXA-24： USB host interface (factory-installed / dealer option)

☐ Stores the weighing value in the USB memory.

GXA-25： Fanless ionizer of Quick Ion technology

☐ This ionizer (static eliminator) unit can be connected to and installed near the GX-AE/GX-A/GF-A series.

GXA-26： External IR switch

☐ External touchless switch that can operate PRINT and RE-ZERO key.

AX-GXA-31： Main unit cover（5 pieces）

☐ Protective cover for standard accessories

Peripheral devices

AD-8920A： Remote Display

- This option can be connected to the balance using the RS-232C interface or current loop and displays the weighing data transmitted by the balance.

AD-8922A： Remote Controller

- This option can be connected to the balance using the RS-232C interface and can control the balance remotely.

AD-8127： Compact printer

- Small dot impact printer that connects with the balance via the RS-232C interface.
- Statistical function, clock and calendar function, interval print function, graphic print function, dump print mode

AD-1687： Weighing Environment logger

- A data logger equipped with 4 sensors for temperature, humidity, barometric pressure and vibration that can measure and store environmental data. When connected to the RS-232C interface of the balance, the AD-1687 can store environmental data along with weighing data. Therefore, it is possible to store data in an environment where a computer can not be used.

AD-1688： Weighing data logger

- When connected to the RS-232C interface of the balance, the AD-1688 can store the data in an environment where a personal computer can not be used.

AD-1689： Tweezers for calibration weight

- A pair of tweezers ideally suited for holding calibration weights of 1g to 500g.

AX-USB-9P： Serial / USB Converter

- An RS-232C cable is provided to connect the USB converter to the balance.
- Enables bi-directional communication between the PC and the balance when a USB driver is installed.

AX-SW137-PRINT： Foot switch for print (with connector)

- Foot switch that functions in the same way as the PRINT key when combined with GXA-23 external connector

AX-SW137-REZERO： Foot switch for re-zero (with connector)

- Foot switch that functions in the same way as the RE-ZERO key when combined with GXA-23 external connector

AX-BM-NEEDLESET： Electrode units for the ionizer (4 pieces)

- Electrode unit replacement for ionizer. When replacing, please replace two at the same time.

  For how to replace, refer to "Maintenance of the electrode unit" in the manual of "GXA-17 Large Glass Breeze Break with Ionizer" which can be downloaded from our website (https://www.aandd.jp).

MEMO

MEMO

MEMO

A&D Company, Limited
3-23-14 Higashi-Ikebukuro, Toshima-ku, Tokyo 170-0013, JAPAN
Telephone: [81] (3) 5391-6132 Fax: [81] (3) 5391-6148

A&D ENGINEERING, INC.
1756 Automation Parkway, San Jose, California 95131, U.S.A.
Telephone: [1] (408) 263-5333 Fax: [1] (408)263-0119

A&D INSTRUMENTS LIMITED
Unit 24/26 Blacklands Way, Abingdon Business Park, Abingdon, Oxfordshire OX14 1DY United Kingdom
Telephone: [44] (1235) 550420 Fax: [44] (1235) 550485

A&D AUSTRALASIA PTY LTD
32 Dew Street, Thebarton, South Australia 5031, AUSTRALIA
Telephone: [61] (8) 8301-8100 Fax: [61] (8) 8352-7409

A&D KOREA Limited 한국에이.엔.디(주)
대한민국 서울시 영등포구 여의도동 36-2 맨하탄 빌딩 8층 우편 번호 150-749
(Manhattan Building 8th Floor, 36-2 Yoido-dong, Youngdeungpo-gu, Seoul, 150-749 Korea)
전화: [82] (2) 780-4101 팩스: [82] (2) 782-4280

OOO A&D RUS ООО "ЭЙ энд ДИ РУС"
121357, Российская Федерация, г.Москва, ул. Верейская, дом 17
(Business-Center "Vereyskaya Plaza-2" 121357, Russian Federation, Moscow, Vereyskaya Street 17)
тел.: [7] (495) 937-33-44 факс: [7] (495) 937-55-66

A&D INSTRUMENTS INDIA PRIVATE LIMITED **ऐ&डी इन्स्ट्रूमेन्ट्स इण्डिया प्रा0 लिमिटेड**
509, उद्योग विहार , फेस -5, गुड़गांव - 122016, हरियाणा , भारत
(509, Udyog Vihar, Phase-V, Gurgaon - 122 016, Haryana, India)
फोन : 91-124-4715555 फैक्स : 91-124-4715599